Draw an Isometric Boat

Answer | Task 1 | A4

Original prompt

Task 1: Draw only the three isometric axes and label them LENGTH, WIDTH, and HEIGHT.

Answer · three axes and labels

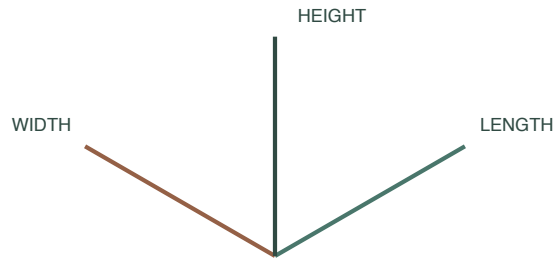

Answer

A vertical line labelled HEIGHT, a line up to the right at 30 degrees labelled LENGTH, and a line up to the left at 30 degrees labelled WIDTH, all meeting at one point.

Reasoning

The axes must be set before any boat edge is drawn, because every later edge is parallel to one of them.

Check

Confirm the two ground axes are at 30 degrees to the horizontal and the third axis is vertical.

Draw an Isometric Boat

Answer I Task 2 I A4

Original prompt

Task 2: Draw a plain isometric hull block with a deck parallelogram, vertical sides, and a bottom parallelogram.

Answer · plain isometric hull block

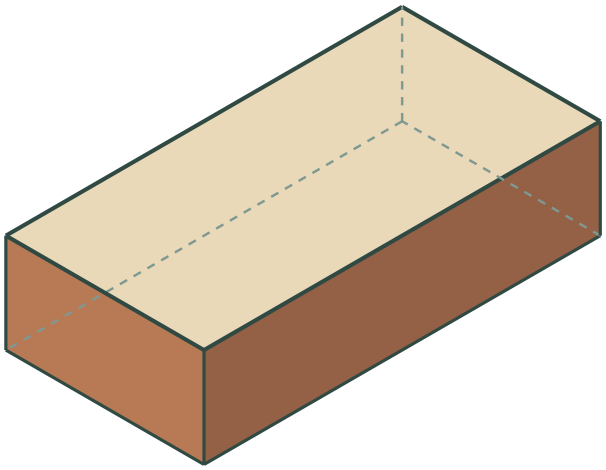

Answer

A rectangular isometric block: deck parallelogram using the length and width axes, four vertical edges, and a matching bottom parallelogram.

Reasoning

The block establishes the hull volume before any shaping or detail is added.

Check

Check that the deck and bottom are parallelograms and that all four side edges are vertical.

Draw an Isometric Boat

Answer I Task 3 I A4

Original prompt

Task 3: Redraw the hull block with a tapered bow at one end of the length axis.

Answer · two axis-aligned bow steps

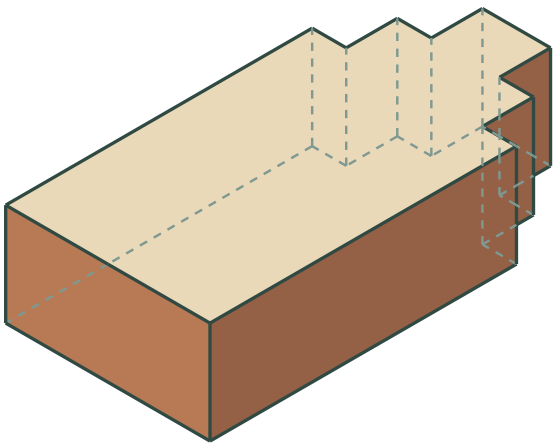

Answer

Keep the hull block dimensions and use two short length-axis/width-axis steps to narrow the bow at one end of the length axis. Drop verticals from the changed deck corners and close the matching bottom outline. Every taper segment is parallel to LENGTH or WIDTH; every drop is parallel to HEIGHT.

Reasoning

The stepped bow narrows the plan outline while every edge remains in one of the three specified axis directions. Matching vertical drops carry that same outline down the hull.

Check

Check that the two bow steps use only LENGTH- or WIDTH-parallel segments, that their matching drops are vertical, and that the remaining hull block is unchanged.

Draw an Isometric Boat

Answer I Task 4 I A4

Original prompt

Task 4: Add a cabin block, a hatch, and a cockpit opening to the tapered hull, then check the whole drawing.

Answer · tapered hull with deck details

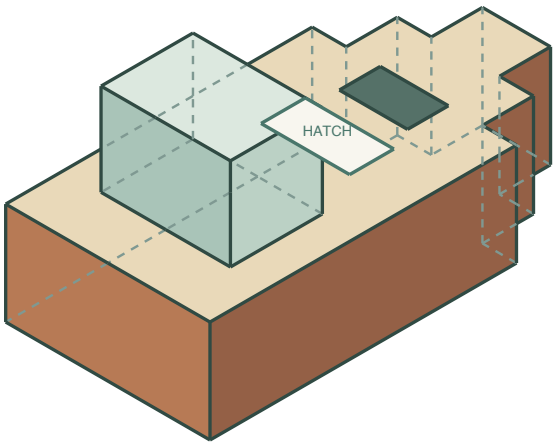

Answer

A cabin block and hatch drawn flat on the deck with vertical sides, a cockpit opening as a flat isometric shape on the deck, and a final check that every edge follows the three axes.

Reasoning

Deck detail must sit on the deck plane and follow the same axes as the hull, or the drawing stops reading as isometric.

Check

Trace each face: top faces use length and width, side faces use length and height, end faces use width and height.