Draw a Boat in One-Point Perspective

Answer | Task 1 | LETTER

Original prompt

Task 1 (construct): Draw a horizon line and one vanishing point. Construct a simple boat hull with a near rectangular face (horizontal deck edge, two vertical side edges, horizontal bottom edge), four receding hull edges aimed at the vanishing point, and a smaller far face. Add a vertical mast standing on the near deck.

Answer drawing

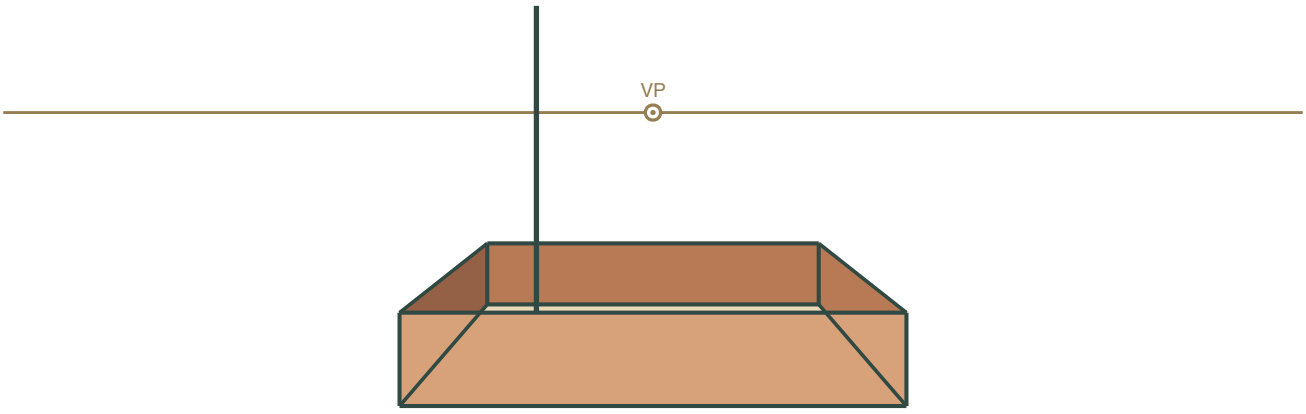

Answer

Horizon line with one marked vanishing point. Near face is a rectangle: horizontal deck edge, two vertical side edges, horizontal bottom edge. Four receding hull edges drawn as lines to the vanishing point; far face closed with a shorter horizontal deck edge, shorter horizontal bottom edge and two shorter vertical side edges. Vertical mast standing on the near deck. Far face smaller than near face.

Reasoning

The near face is square to the viewer, so it stays horizontal and vertical; the receding hull edges converge to the single vanishing point, and the mast stays vertical because it stands upright.

Check

Lay a ruler along each receding hull edge; it should pass through the vanishing point. Confirm the far face is smaller than the near face and the mast is vertical.

Draw a Boat in One-Point Perspective

Answer | Task 2 | LETTER

Original prompt

Task 2 (redraw from reference): Using the worked plate as a reference, redraw the same boat but move the vanishing point to a marked point on the left side of the horizon, outside the near face. Keep the near face square and re-aim all receding hull edges at the new point.

Answer drawing

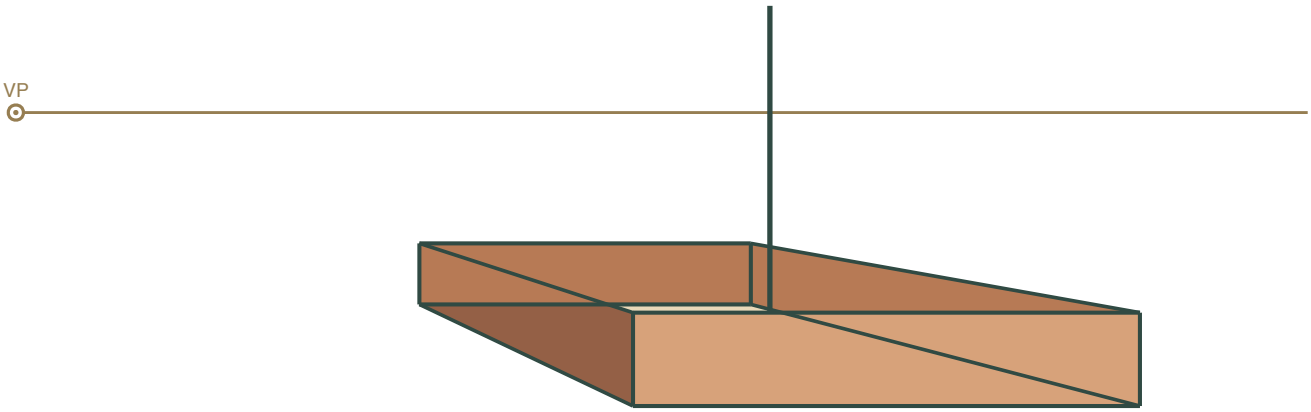

Answer

Near face unchanged (horizontal deck edge, vertical side edges, horizontal bottom edge, vertical mast). All four receding hull edges now aimed at the marked left-side vanishing point on the horizon. Far face still smaller than near face and still closed with horizontal and vertical edges.

Reasoning

Moving the vanishing point changes the direction of every receding edge but not the square near face, so the boat appears to be seen from a different angle while the construction rules stay the same.

Check

Extend each receding hull edge; all should meet at the marked left-side vanishing point, and the far face should still be smaller than the near face.

Draw a Boat in One-Point Perspective

Answer | Task 3 | LETTER

Original prompt

Task 3 (compose): Draw two boats on one horizon with a single shared vanishing point: one nearer the viewer and one farther away. Both boats' receding hull edges must aim at the same point, and each boat's mast must be vertical.

Answer drawing

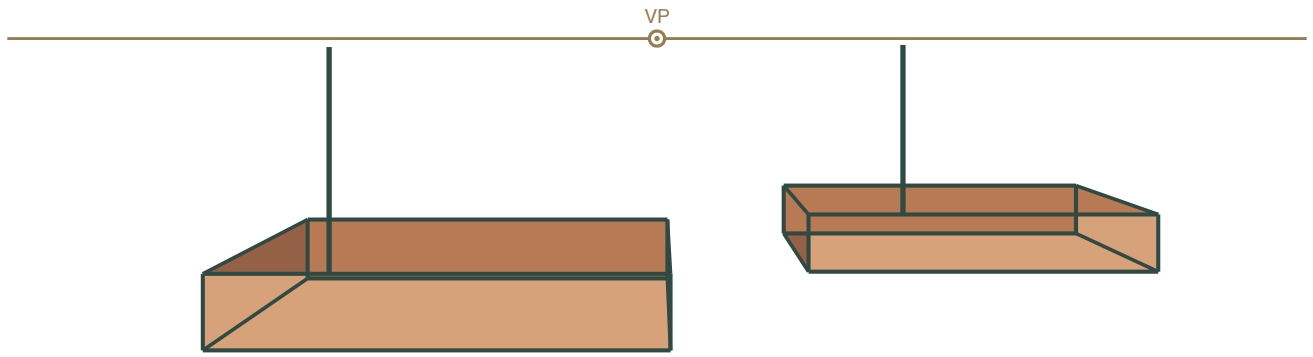

Answer

One horizon line and one vanishing point. Near boat with a larger near face and four receding hull edges to the point; far boat with a smaller near face and four receding hull edges to the same point. Both boats' receding hull edges converge to the shared point; both masts vertical.

Reasoning

A single vanishing point on a shared horizon keeps both boats consistent with the same viewer position; the farther boat is drawn smaller because it is farther away.

Check

Check that every receding hull edge on both boats passes through the one vanishing point, that the far boat's faces are smaller than the near boat's, and that both masts are vertical.

Draw a Boat in One-Point Perspective

Answer I Task 4 I LETTER

Original prompt

Task 4 (check and correct): The supplied error plate shows a boat whose receding deck edges miss the vanishing point and whose far face is larger than its near face. Identify the errors and redraw the plate correctly.

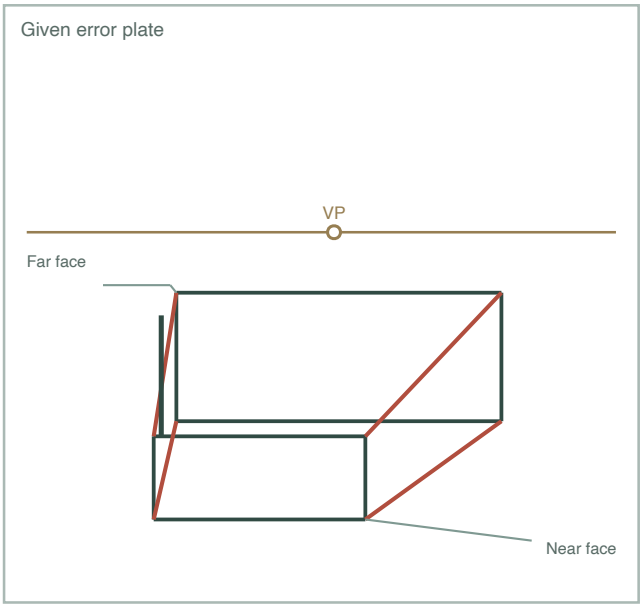

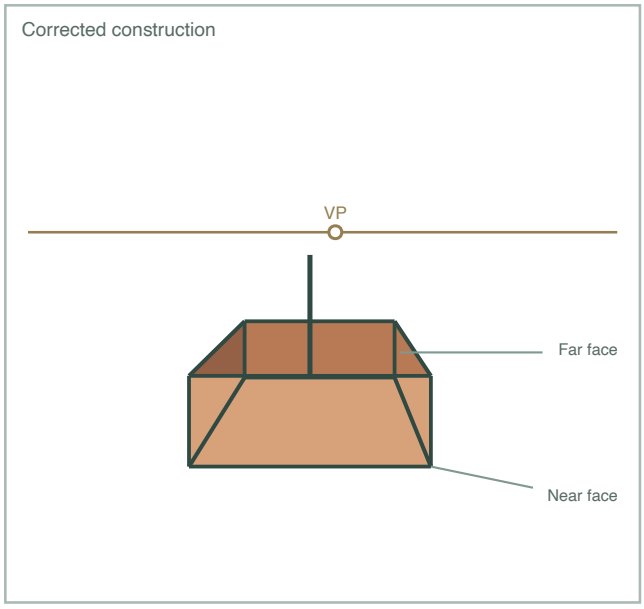

Answer

Error 1: receding deck edges do not pass through the vanishing point; redraw them aimed at the point. Error 2: far face is larger than near face; move the far face closer to the vanishing point so the far face is smaller. Redrawn plate has all receding hull edges through the point, a smaller far face, and a vertical mast.

Reasoning

Receding edges must converge to the single vanishing point, and distance makes the far face smaller; both errors break the perspective reading.

Check

Extend each receding hull edge to confirm it meets the vanishing point, and compare near and far face sizes to confirm the far face is smaller.