Draw a Building on a Perspective Grid

Original prompt

Task 1: Set up a perspective grid with a horizon line and two vanishing points, and draw the grid lines from both points.

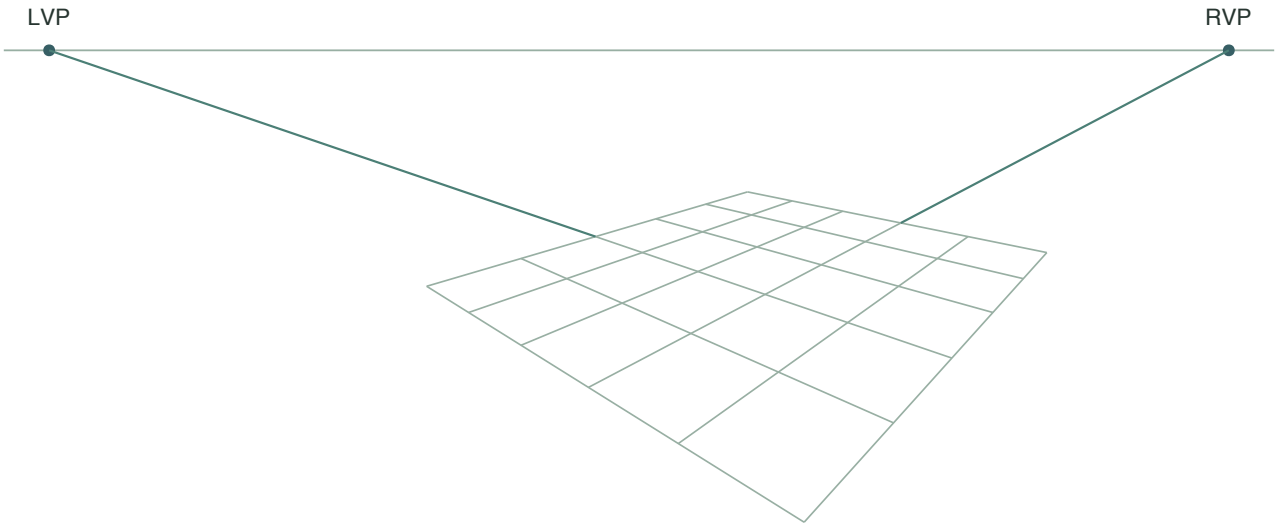

Two families of equal ground steps

Answer

A page with a horizon line, a left vanishing point and a right vanishing point on it, and two families of grid lines converging at those points, crossing to form consistent quadrilaterals.

Reasoning

The grid is the scaffold; without consistent lines from both vanishing points, later building edges cannot be aligned.

Check

Trace each grid line back with a straight edge; every line must pass through one of the two vanishing points.

Draw a Building on a Perspective Grid

Original prompt

Task 2: On your grid, place a building's near vertical on a front grid cell and draw its two receding edges to the left and right vanishing points.

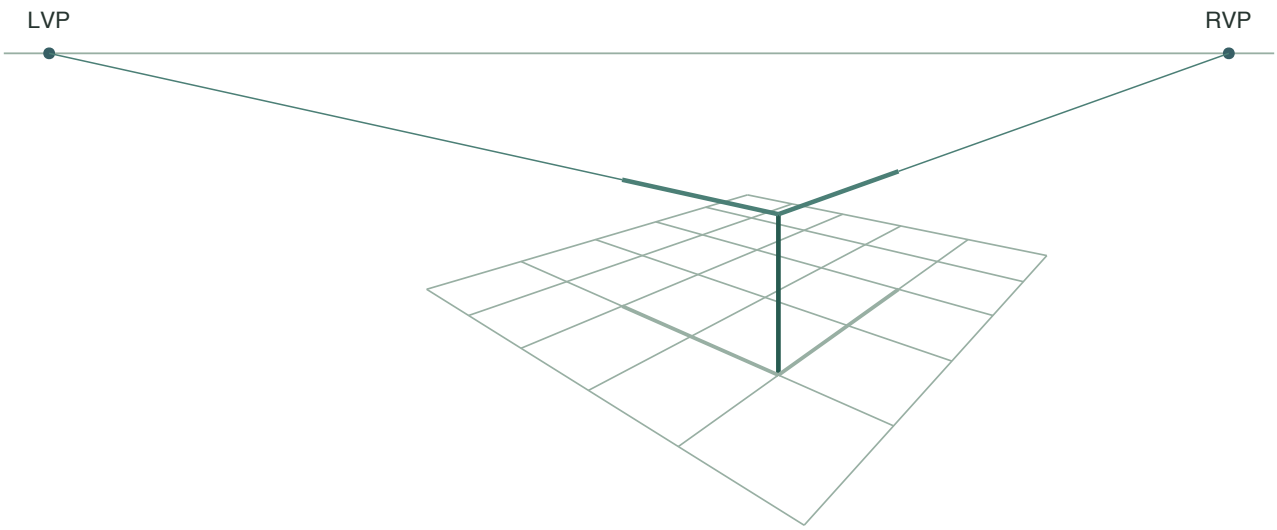

The upright separates the ground lines and raised guides.

Answer

An upright starts on a front grid crossing. From its top draw one line toward LVP and one toward RVP. The two ground grid directions under those lines locate their base partners.

Reasoning

The crossing anchors both directions at the foot. Moving to the upper endpoint makes new guide lines to the same vanishing points.

Check

Confirm the upright is vertical. Extend each upper edge to its own point and compare that direction with the matching base line.

Draw a Building on a Perspective Grid

Original prompt

Task 3: Close the building by stopping the receding edges at chosen grid lines and drawing the far verticals where they meet.

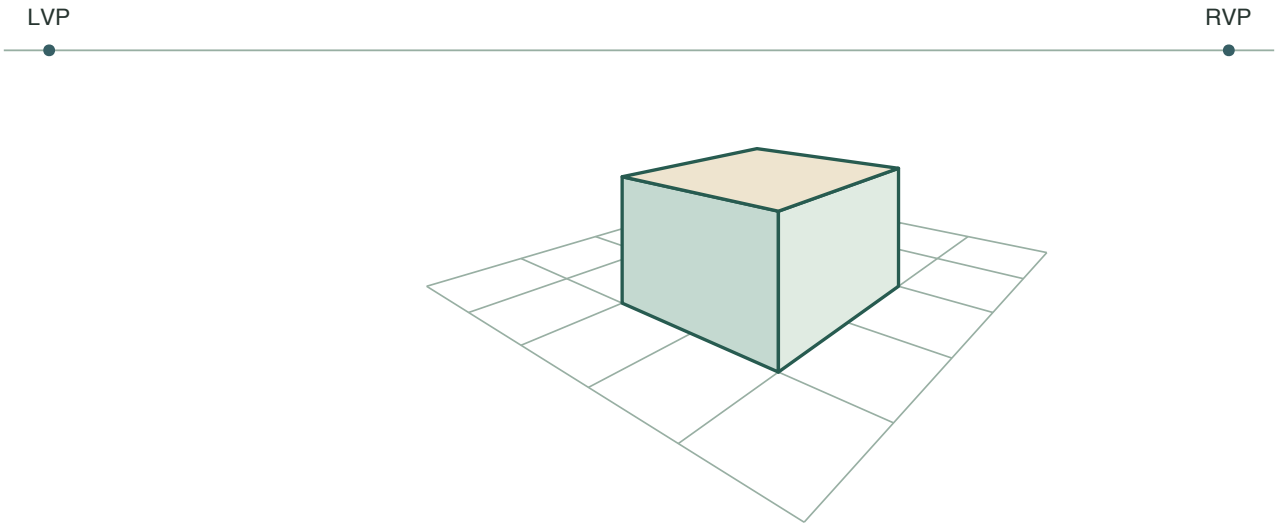

Footprint on the grid with the roof raised above it

Answer

Select the two ends of the base segments at ground crossings and raise verticals there. They stop where they meet the two upper guides. Close the far edges of the top to finish the mass.

Reasoning

Stopping at grid lines keeps depth consistent with the grid, and far verticals close the mass without guessing.

Check

Check that the feet are on the chosen ground crossings. Each far upright ends at the meeting with its raised guide, and the closing edges aim at their correct points.

Draw a Building on a Perspective Grid

Answer | Task 4 of 4 | A4

Original prompt

Task 4: Check your finished plate by testing every receding building edge against its vanishing point and correcting any edge that drifts.

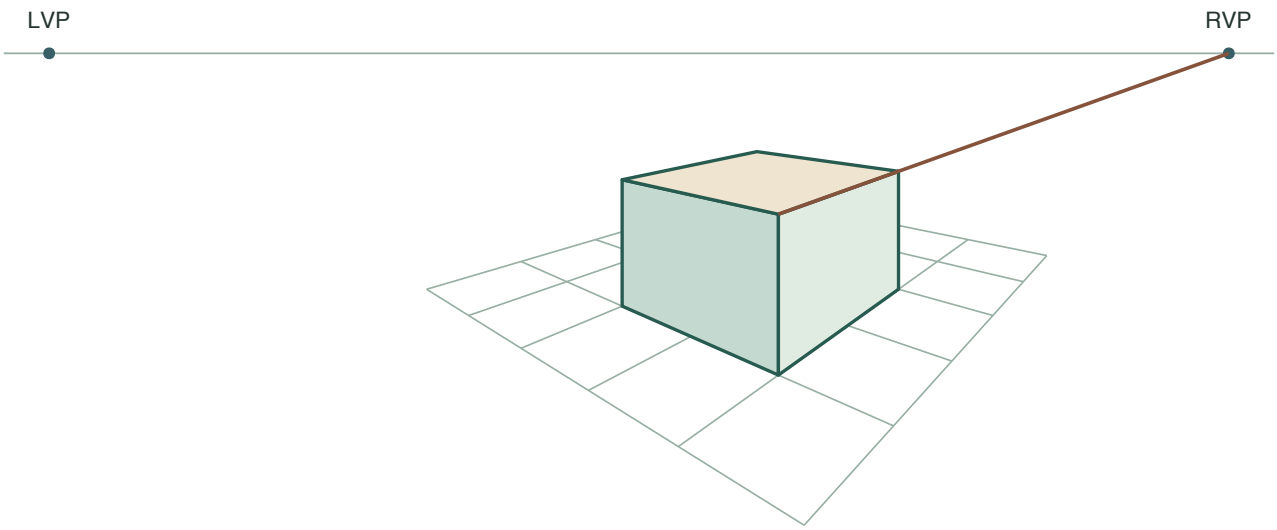

Extend the raised edge to RVP.

Answer

A corrected plate in which every receding building edge passes through its vanishing point and the grid remains consistent.

Reasoning

Alignment is the point of the plate; a straight-edge check catches drift that the eye misses.

Check

Repeat the straight-edge test on every receding edge after correction; all must pass through the correct vanishing point.