Draw a Refrigerator in One-Point Perspective

Reference | Observation plate | LETTER

Compare the level front door with the faint rear and depth guides.

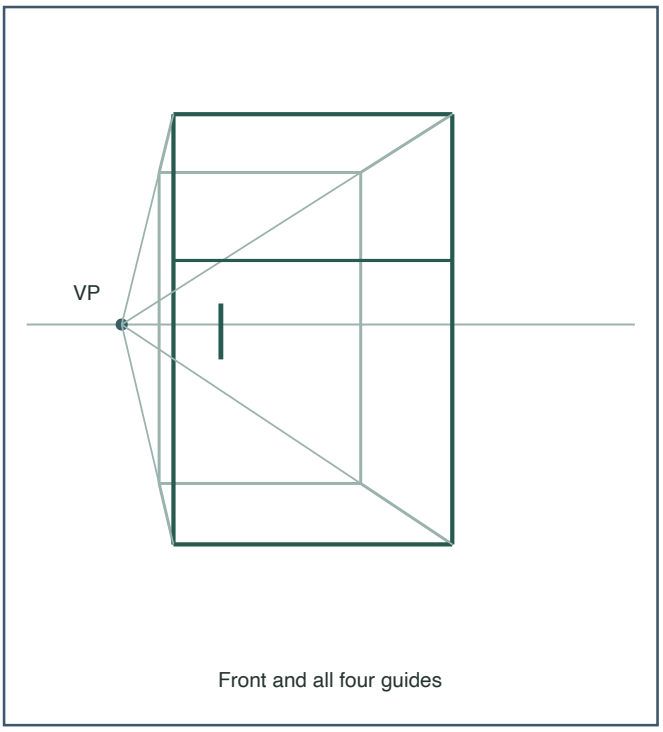

Front and all four guides

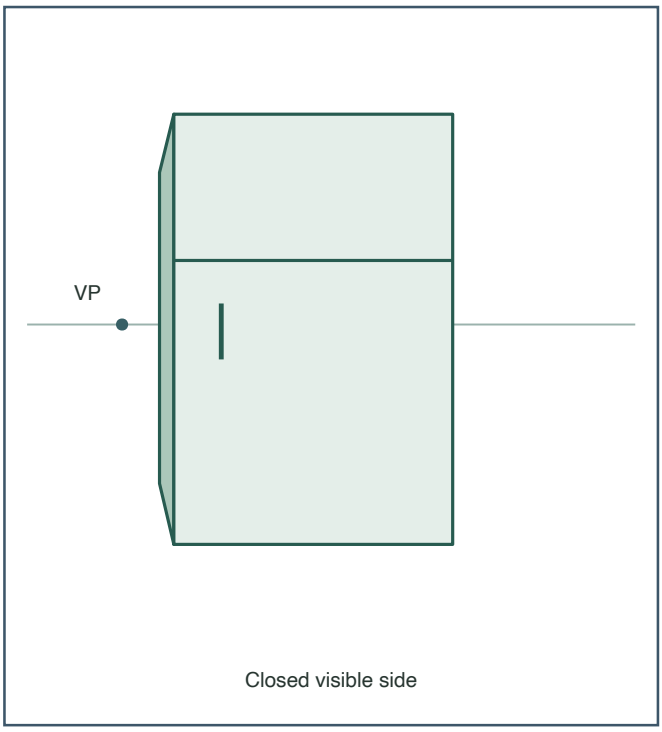

Closed visible side

Draw a Refrigerator in One-Point Perspective

Reference I Worked example I LETTER

Original prompt

Construct a refrigerator in one-point perspective with the vanishing point to the left, showing depth lines and a closed side face.

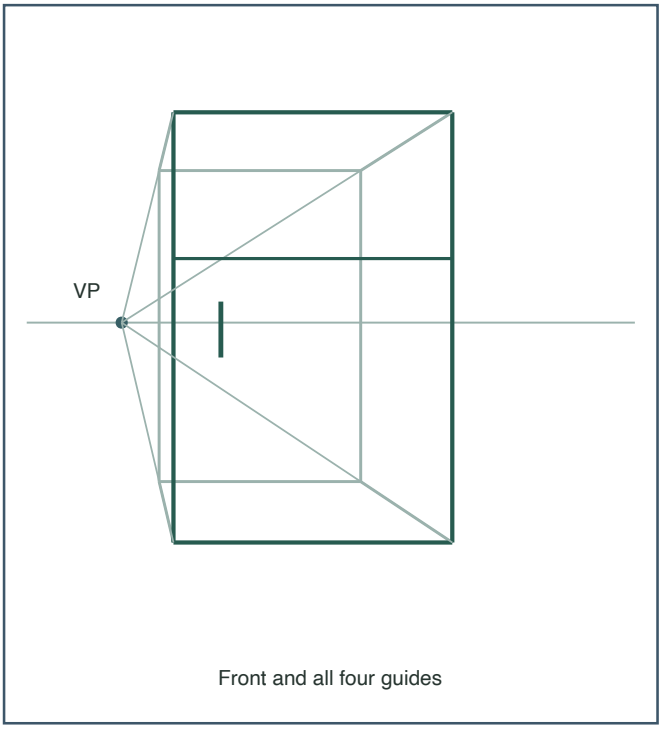

Front and all four guides

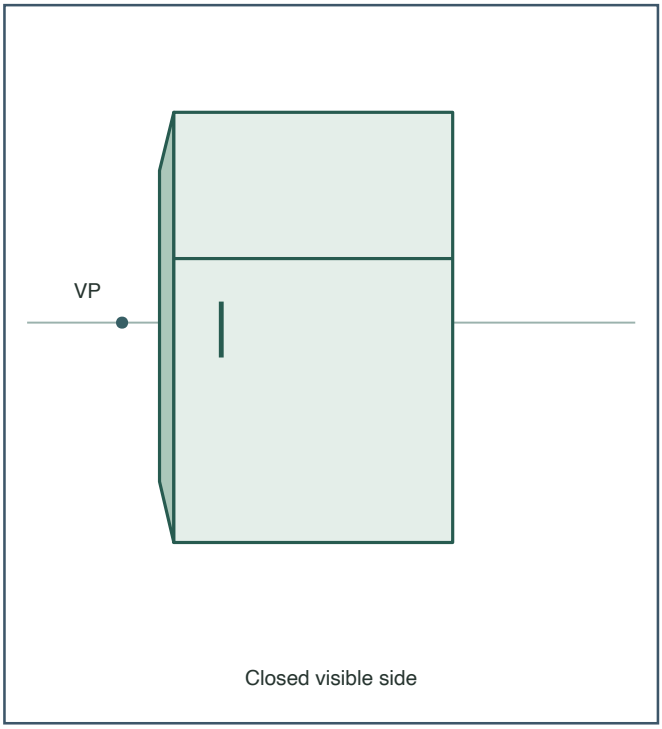

Closed visible side

Answer

Mark a left vanishing point on the horizon, draw the front rectangle and aim four light rays at the point. Mark one fraction on all four. Separate the resulting closed side from the pale guide extensions, then put the seam and handle on the front.

Reasoning

One fraction makes the rear rectangle smaller while keeping it parallel to the front. The transparent construction shows hidden edges. The clean drawing keeps visible edges.

Check

Trace each receding edge back to the vanishing point and confirm the front face is still a rectangle.