Draw a Logo in Perspective

Answer | Task 1 of 4 | A4

Original prompt

Task 1: Draw a triangular logo in one-point perspective. Place a horizon line and vanishing point, draw a triangle front face, project its corners back, and complete the receding form.

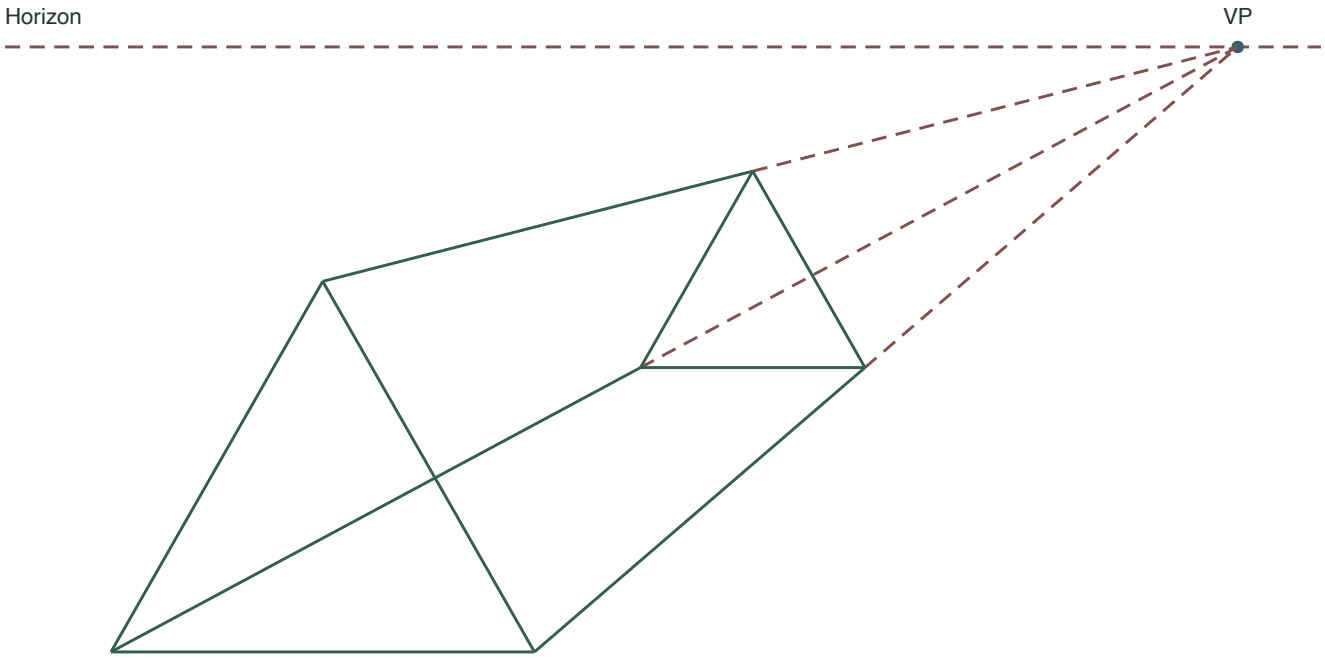

Answer

A triangle front face with three construction lines aimed at the vanishing point, a smaller back triangle whose corners lie on those lines, and connecting edges forming a receding triangular logo.

Reasoning

Each corner of the front triangle is projected toward the vanishing point; the back triangle is placed smaller along those lines.

Check

Check that all three receding edges point at the vanishing point and the back triangle is smaller than the front.

Draw a Logo in Perspective

Original prompt

Task 2: Draw a circular logo in one-point perspective. Draw a circle front face, project its outline back toward the vanishing point, and complete a receding ring form.

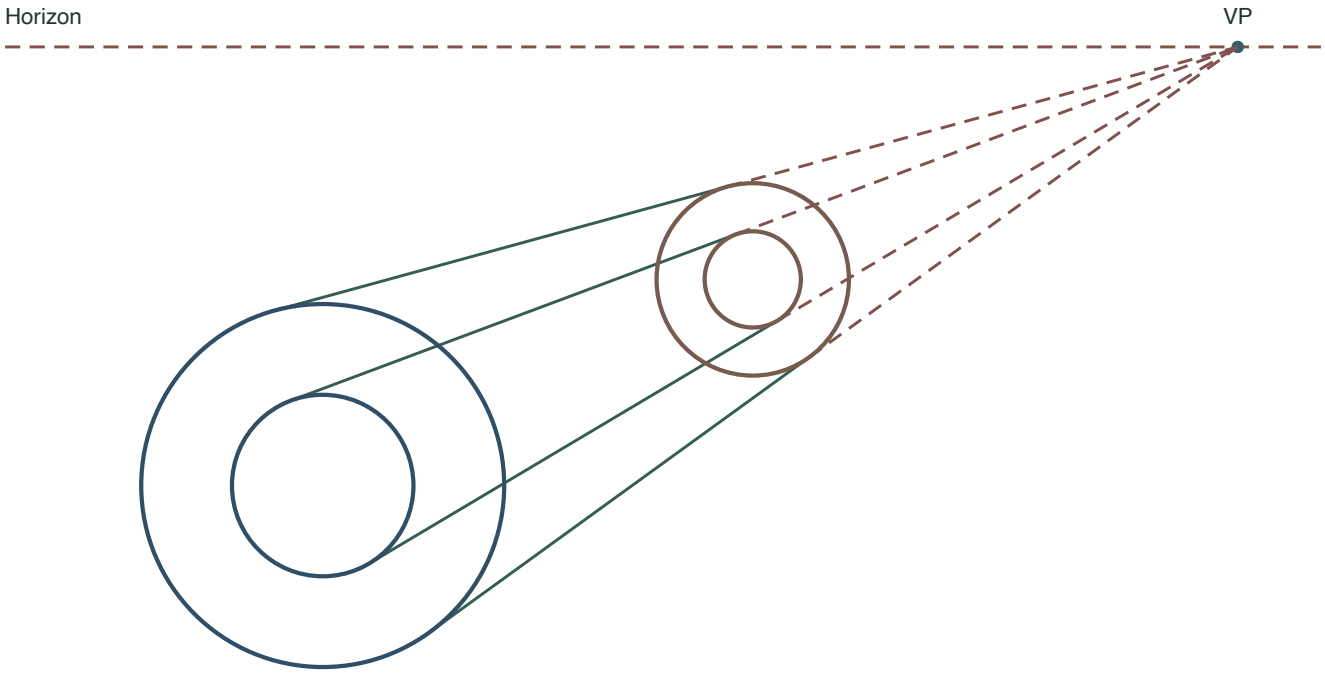

Front: Round ring

Smaller back outline

Both circles on a face share a center. Light guides show how its two rims recede.

Answer

Draw two concentric circles for the front ring, leaving the middle open. On the construction rays, place a smaller pair of concentric circles for the rear ring. Join matching points to show the depth of both ring edges.

Reasoning

Project matching points on both rims toward the same vanishing point. Using the same reduction factor for both rims keeps the back ring proportional to the front.

Check

Check that both faces show the opening and that the rear circles share a center. Their center and the front center lie on the same line toward the vanishing point.

Draw a Logo in Perspective

Answer I Task 3 of 4 I A4

Original prompt

Task 3: Draw a letter-shaped logo (for example, an L) in one-point perspective. Draw the letter outline as the front face, project its corners back, and complete the receding form.

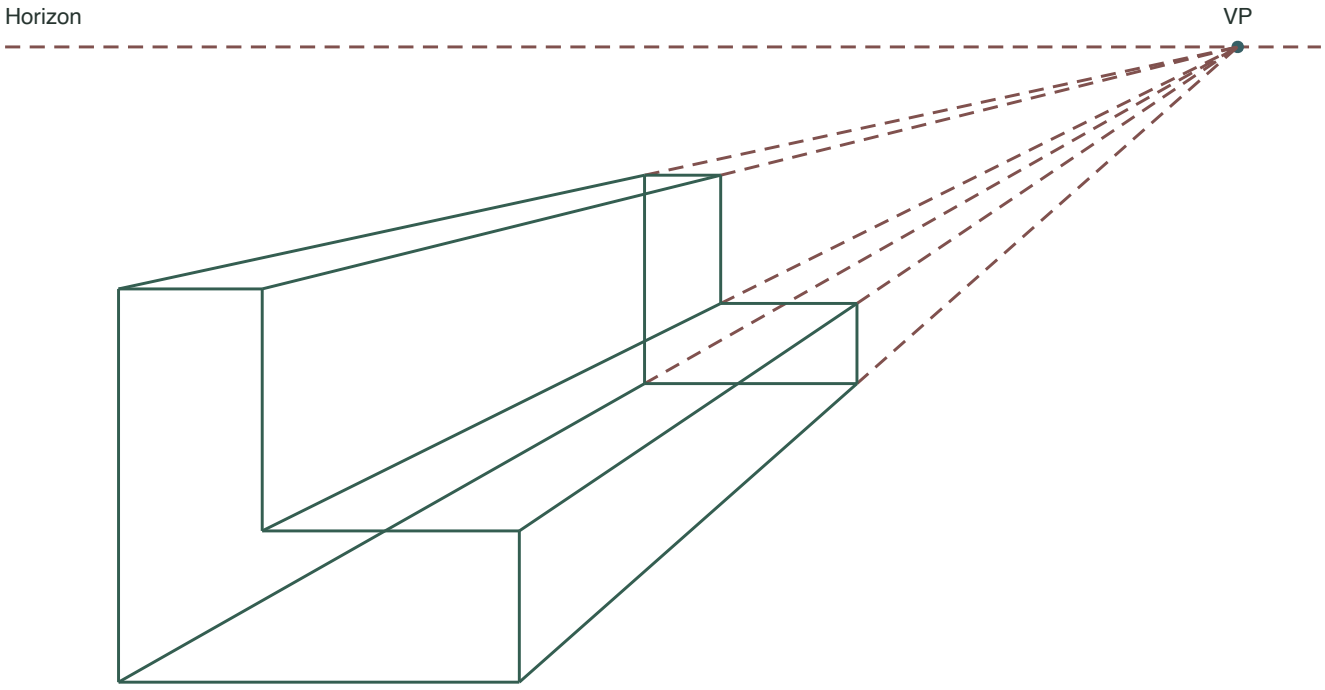

Front: L outline

Smaller back outline

Answer

An L-shaped front face with construction lines from its corners aimed at the vanishing point, a smaller back L placed along those lines, and connecting edges forming a receding letter logo.

Reasoning

The letter outline fixes the shape; each corner is projected toward the vanishing point to build the back face.

Check

Check that the back L is smaller, aligned behind the front L, and that all receding edges point at the vanishing point.

Draw a Logo in Perspective

Original prompt

Task 4: Draw a logo of your own chosen simple shape in one-point perspective, then check it. State your chosen shape, place the vanishing point, and complete the construction.

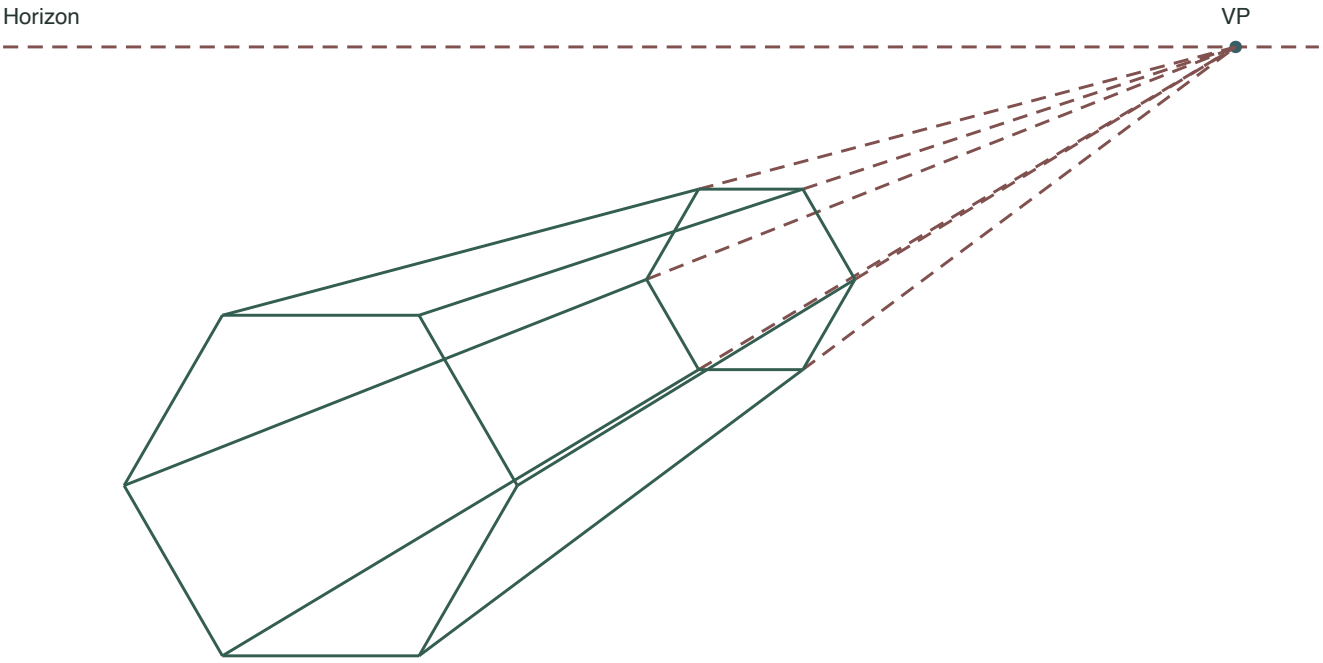

Front: Hexagonal badge

Smaller back outline

Answer

A chosen simple shape drawn as a front face, with construction lines from its corners aimed at the vanishing point, a smaller back face along those lines, and connecting edges forming a receding logo.

Reasoning

The chosen shape is treated like the square example: front face, projected corners, smaller back face, connecting edges.

Check

Check that the shape is recognizable at both faces, the back face is smaller, and all receding edges converge at the vanishing point.