Draw a Logo in Perspective

Reference I Worked example I LETTER

Original prompt

Worked example: a simple square logo drawn in one-point perspective.

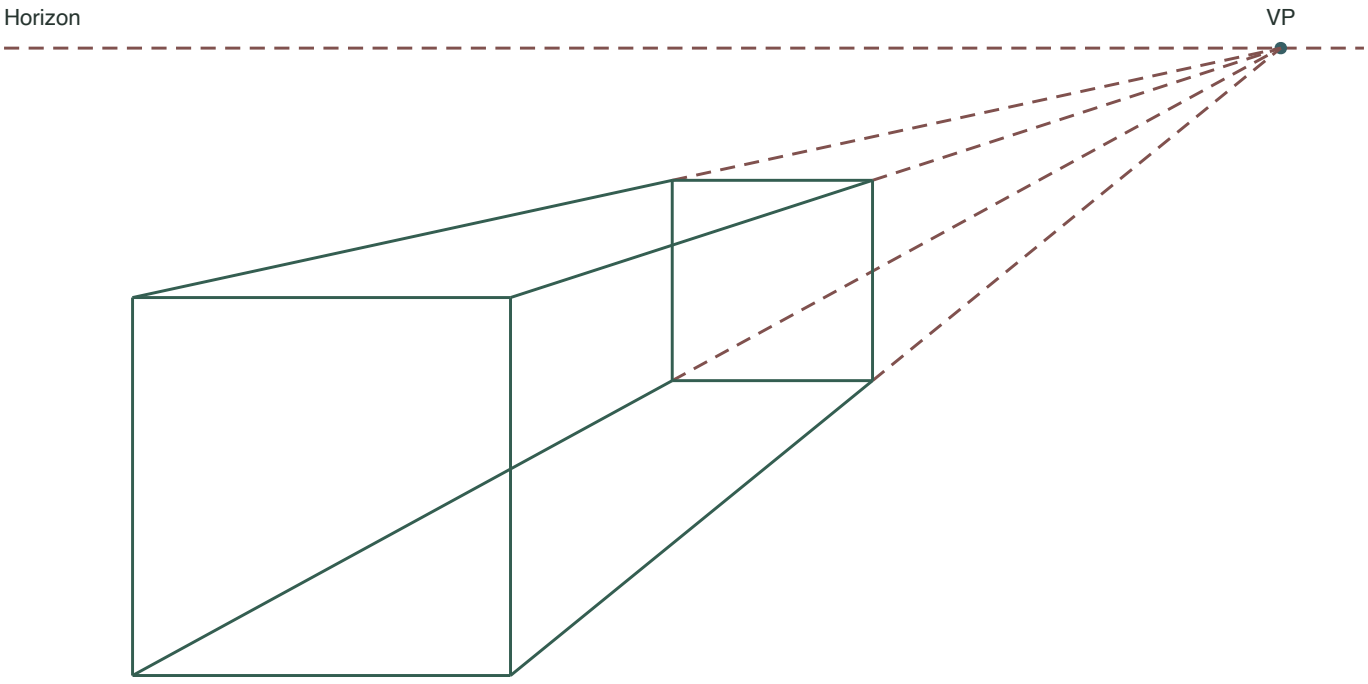

Answer

Draw a horizon line and mark a vanishing point. Draw a square front face. From each of its four corners, draw a light line to the vanishing point. Mark a back square smaller than the front, with its corners on those lines. Connect the back corners. The result is a square logo receding toward the vanishing point, with all receding edges aimed at it.

Reasoning

The front face fixes the logo shape; the construction lines carry each corner back toward the vanishing point; the smaller back face and connecting edges create the receding form.

Check

Confirm all four receding edges point at the vanishing point and the back square is smaller and centered behind the front square.