Window Perspective Drawing

Answer | Task 1 of 4 | A4

Original prompt

Task 1: Draw a one-point window plate with the guide at eye level and the window centered on the wall. Include near opening, far opening, reveal, frame, and sill.

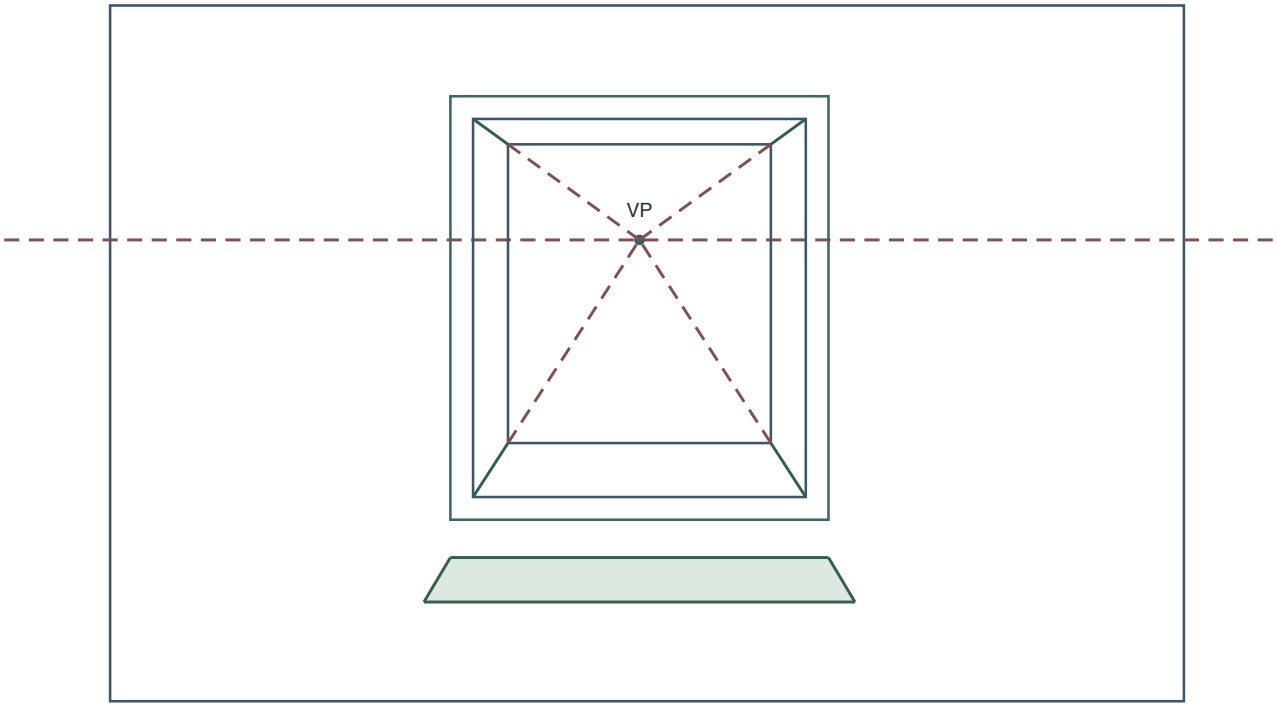

The transparent construction shows both openings. The green border is the frame. The shaded sill projects toward you.

Answer

A centered window whose receding lines converge on the central guide, with a symmetric frame and a sill projecting below the opening.

Reasoning

Centering the window means the left and right receding lines are mirror images, so they meet at the central guide; the sill is drawn as a horizontal ledge below the opening.

Check

Confirm the left and right receding lines meet at the guide and the sill's front edge is horizontal.

Window Perspective Drawing

Answer | Task 2 of 4 | A4

Original prompt

Task 2: Draw the same construction with the guide moved to the left of the wall and the window on the right.

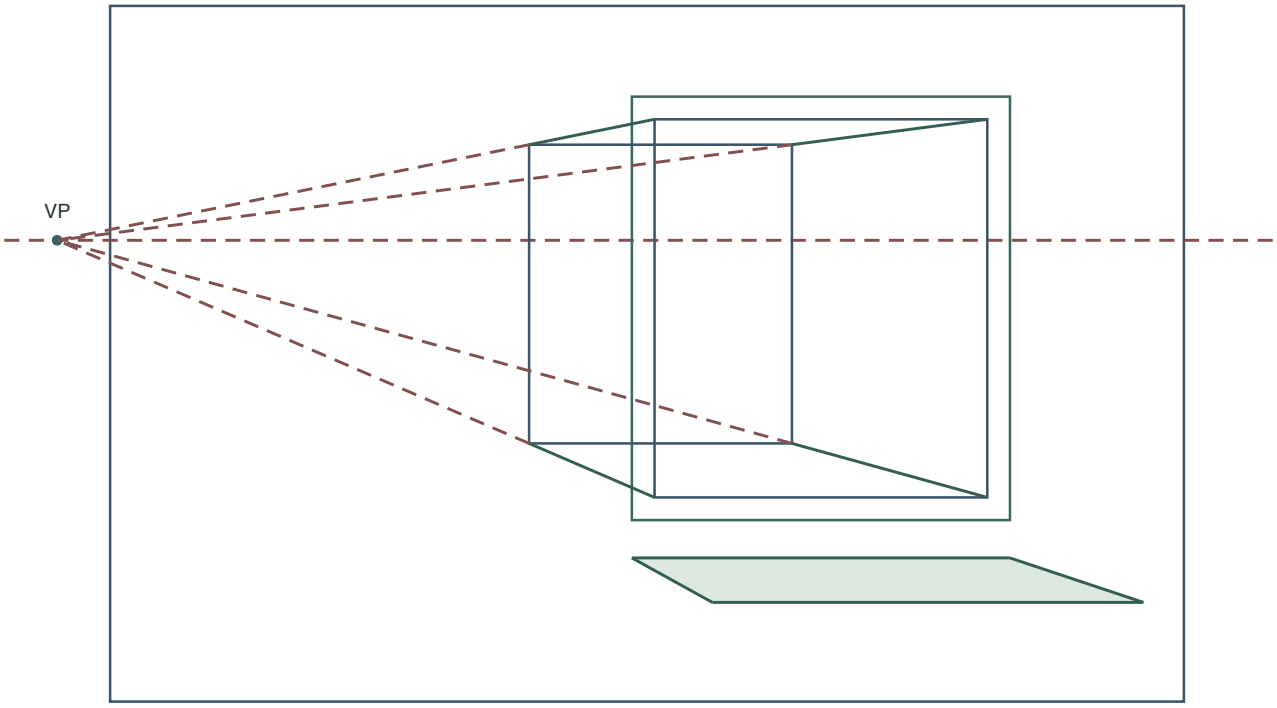

The transparent construction shows both openings. The green border is the frame. The shaded sill projects toward you.

Answer

The window's receding lines slant left toward the guide; the frame and sill follow the same construction, with the sill below the opening.

Reasoning

Moving the guide changes the direction of the receding lines but not the construction order; the window's horizontal and vertical edges stay true.

Check

Confirm no receding line points away from the guide and the sill reads as a ledge below the opening.

Window Perspective Drawing

Answer | Task 3 of 4 | A4

Original prompt

Task 3: Draw a window plate where the sill is deeper than in the worked example, so its front edge sits farther from the wall.

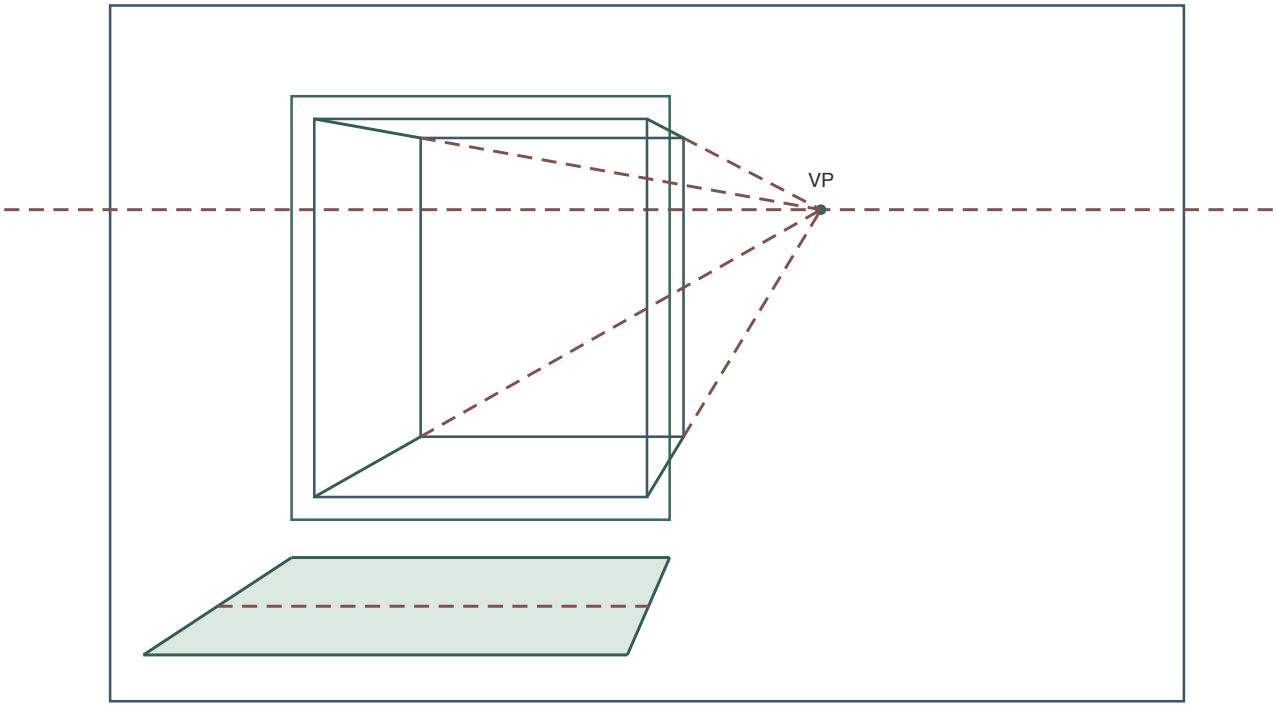

The dashed line across the sill is the original front edge. The lower solid edge is the deeper front.

Answer

The sill's side edges are longer receding lines to the guide, and its front edge stays parallel to the wall.

Reasoning

Enlarge the distance from the wall edge to the sill's front edge along the same side rays. In this view the front edge moves away from the vanishing guide, toward the viewer. Both ends move by the same projective scale, so the edge stays horizontal.

Check

Confirm the deeper sill still converges to the same guide and its front edge does not tilt.

Window Perspective Drawing

Answer | Task 4 of 4 | A4

Original prompt

Task 4: Draw a window plate and then redraw it with the frame wider, keeping the same guide and opening.

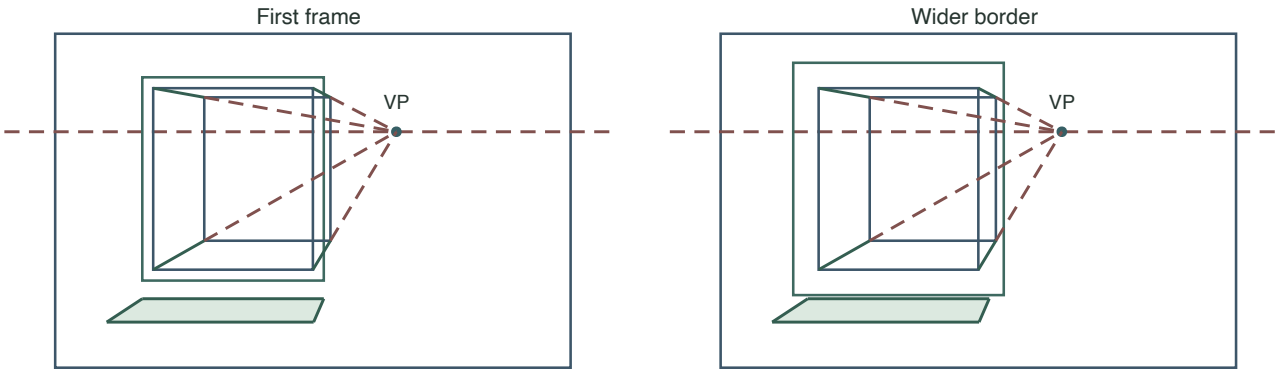

Compare the two outer borders. The same openings, sill and vanishing point remain.

Answer

The wider frame surrounds the same opening; the receding lines and sill are unchanged.

Reasoning

The frame is a border around the opening, so widening it does not move the opening's corners or the receding lines.

Check

Confirm the opening's far rectangle still sits on the same four receding lines and the guide is unchanged.