Window Perspective Drawing

Reference I Worked window plate I LETTER

Original prompt

Draw a one-point window plate: wall rectangle, guide point, near opening, far opening, reveal, frame, and sill.

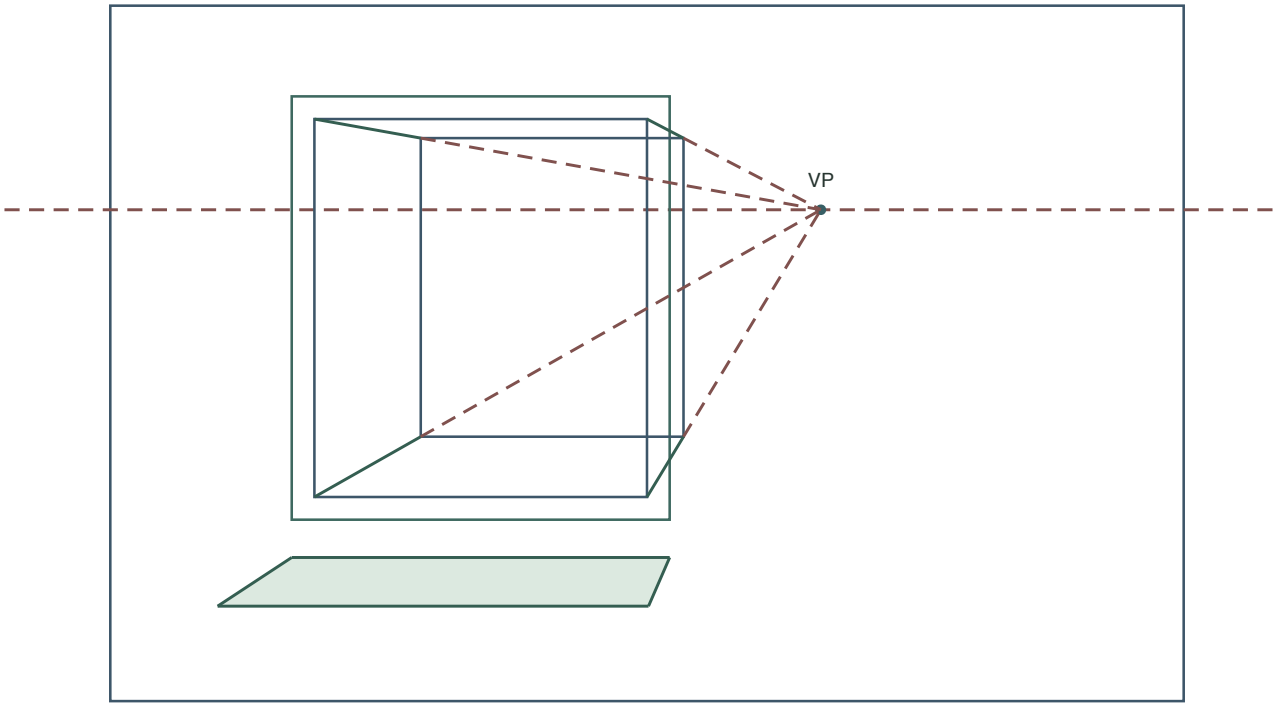

The transparent construction shows both openings. The green border is the frame. The shaded sill projects toward you.

Answer

A wall rectangle with a guide point; a tall near opening; four light receding lines to the guide; a smaller far opening on those lines; reveal lines connecting near and far corners; a frame border around the near opening; and a sill band below with a horizontal front edge and receding side edges.

Reasoning

The construction is consistent when every receding edge points to the single guide and the opening's horizontal and vertical edges stay true; the sill is a ledge, not a second frame.

Check

Trace each receding line to the guide; confirm the far opening's corners sit on those lines; confirm the sill's front edge is horizontal and its side edges recede to the guide.