Draw a Bed in Perspective

Answer | Task 1 of 4 | A4

Original prompt

Task 1: Draw the front view of a bed as a flat rectangle with a mattress line.



Answer

A wide rectangle with a horizontal mattress line partway up.

Reasoning

The front view is the flat reference; the mattress line marks where the mattress sits on the frame.

Check

The mattress line should be parallel to the top and bottom edges.

Draw a Bed in Perspective

Original prompt

Task 2: From a front rectangle, draw four receding lines to one vanishing point.

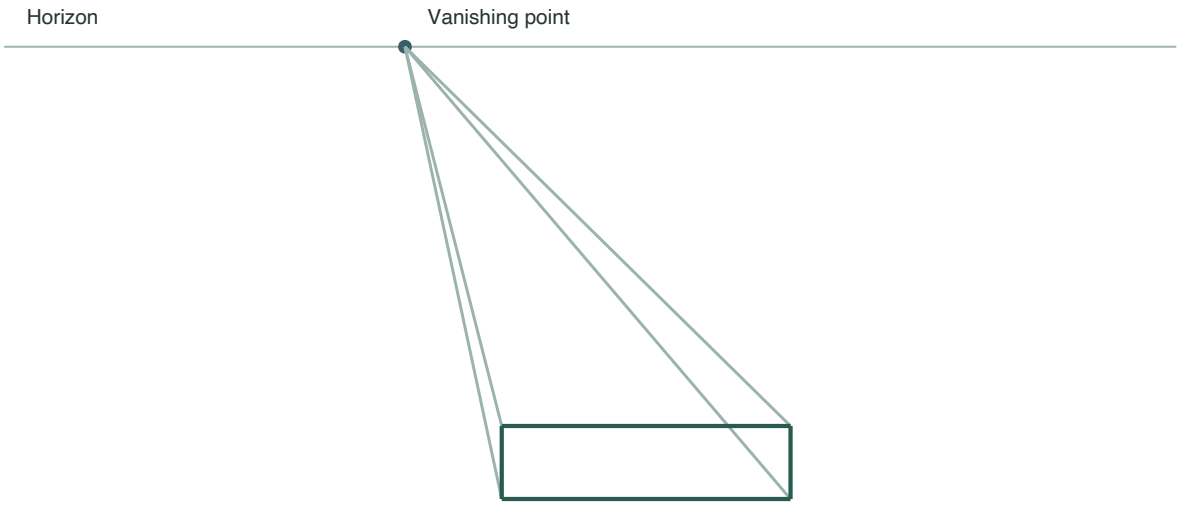

Answer

Four light lines from the rectangle's corners meeting at a single point on the horizon.

Reasoning

In one-point perspective all depth edges converge at one vanishing point.

Check

All four lines should meet exactly at the marked point.

Draw a Bed in Perspective

Original prompt

Task 3: Close the back rectangle at a chosen depth and add the mattress box.

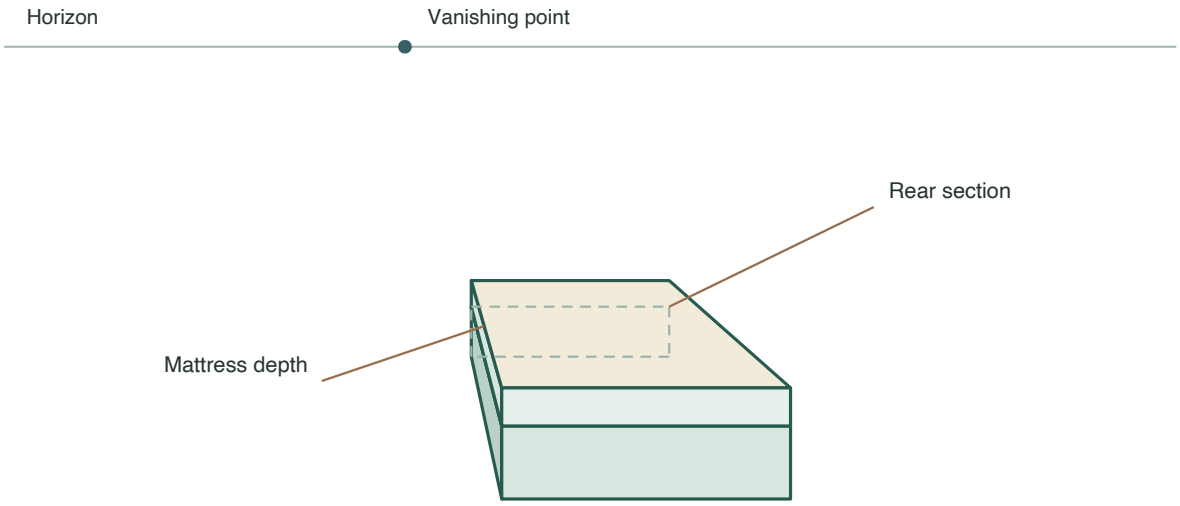

Answer

A smaller back rectangle joined to the front by the receding lines, with a shallow mattress box on top whose side edges also aim at the vanishing point.

Reasoning

The back rectangle defines depth; the mattress follows the same converging lines so it sits correctly on the frame.

Check

The back rectangle's sides should be parallel to the front rectangle's sides, and the mattress edges should point at the vanishing point.

Draw a Bed in Perspective

Original prompt

Task 4: Add a headboard at the back and produce the final cleaned plate beside the front view.



Front view

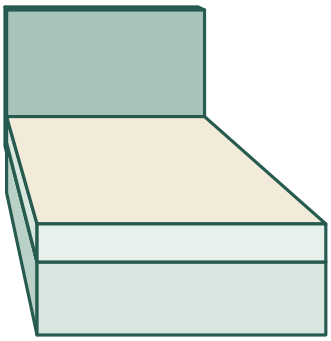

One-point view

Answer

Place a taller rectangle at the rear section. Its front face stays level and upright; any lengthwise thickness aims at the vanishing point. Remove the construction guides and put the cleaned bed beside the matching flat front view.

Reasoning

The headboard and foot-end face both lie in planes parallel to the picture. The lengthwise frame and mattress edges show the depth between those planes.

Check

Check that the headboard stands at the rear and that its face edges stay horizontal and vertical. The flat front view should match the foot end of the perspective drawing.