Draw Isometric Heat Exchanger

Reference I Construction study I LETTER

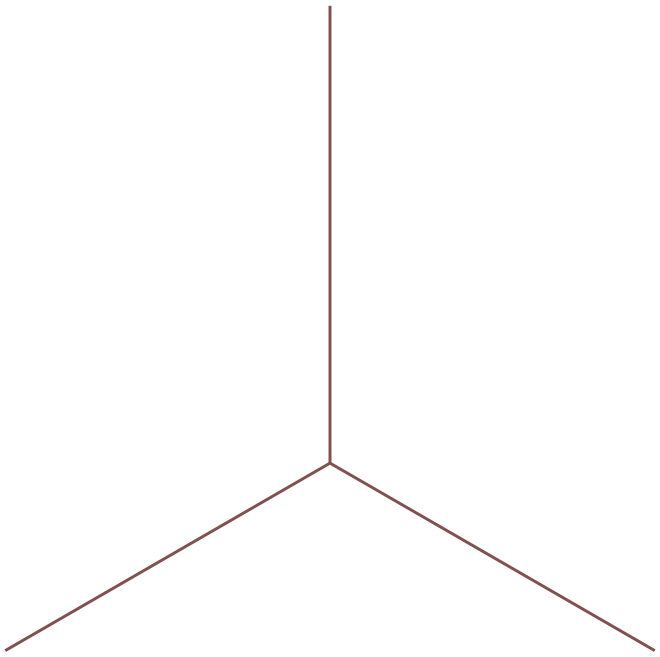

Draw Isometric Heat Exchanger

Reference | Construction study | LETTER

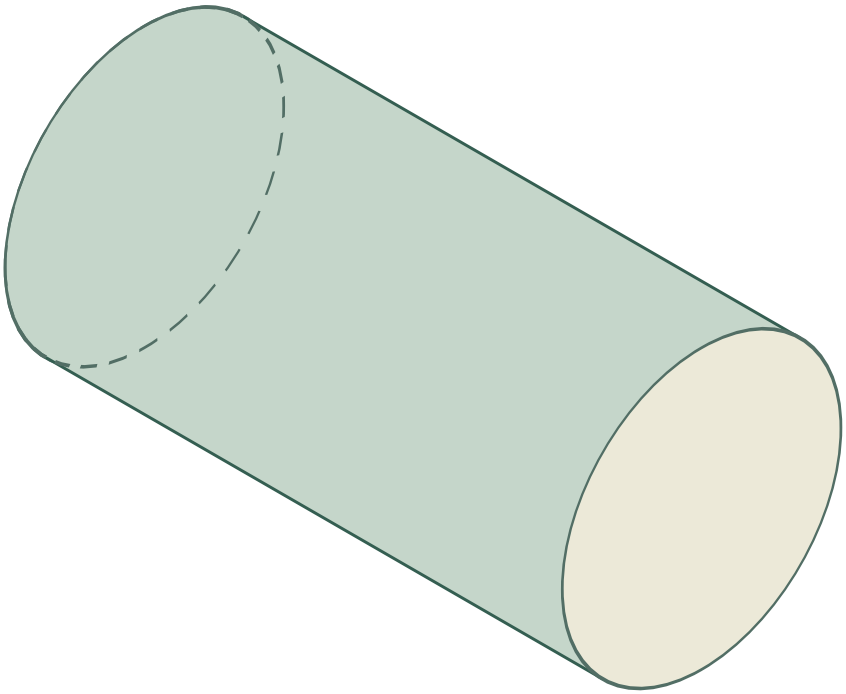

Draw Isometric Heat Exchanger

Reference | Construction study | LETTER

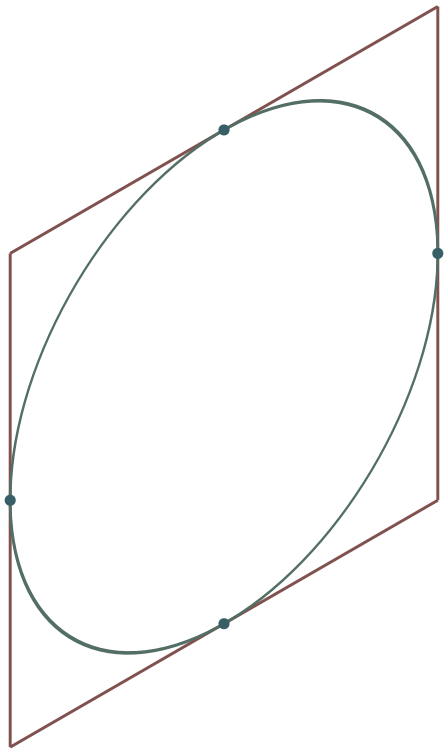

The oval touches the marked side midpoints. The corners stay outside it.

Draw Isometric Heat Exchanger

Reference | Construction study | LETTER

Prompt

Worked example: draw a horizontal cylindrical shell with one box support beneath it and one nozzle on top.

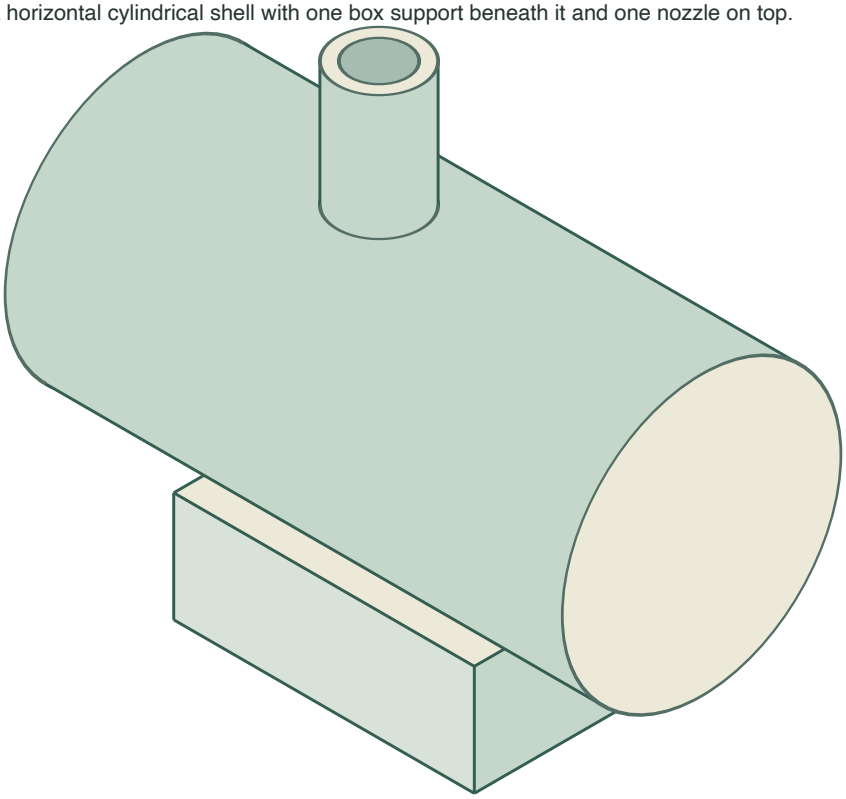

Answer

Run the shell along one ground axis. In each parallel end plane, enclose the circle with a square and draw the projected ellipse through the four side midpoints. Join its silhouette tangencies with lines parallel to the shell axis. Bring the support top to the underside of the shell and place the nozzle upright at the top.

Reasoning

The shell is a cylinder, so its ends are ellipses on isometric axes; the support is a box with edges parallel to the axes; the nozzle is a small cylinder whose axis is vertical, keeping its ellipses consistent with the shell's construction.

Check

Confirm equal shell-end shapes, straight side contours parallel to the shell direction, support contact and the upright nozzle direction.