Draw Isometric Heat Exchanger

Answer | Task 1 of 4 | A4

Prompt

Task 1: draw the isometric axes and a single cylindrical shell with both end ellipses, no other components.

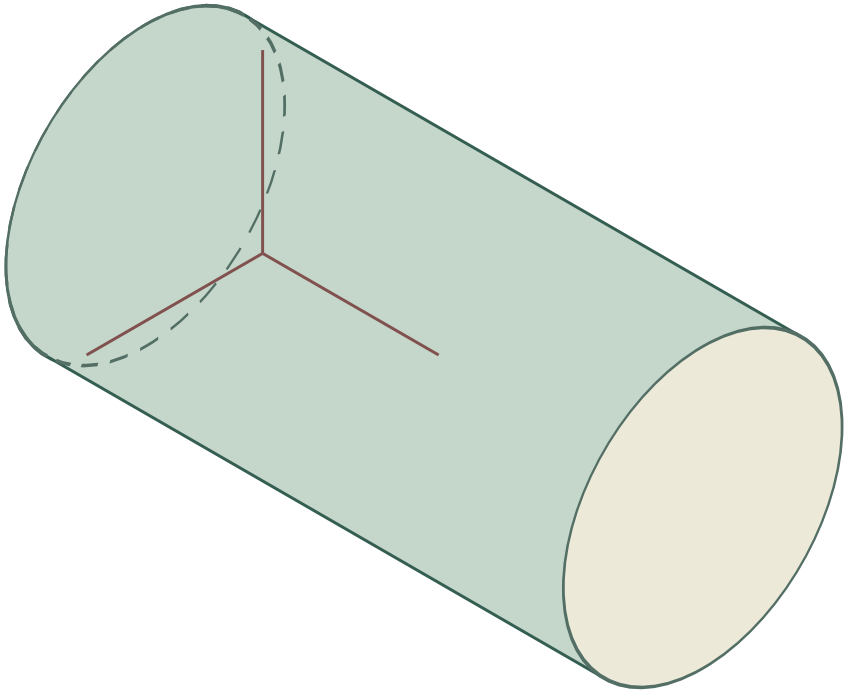

Answer

Run the shell along one ground axis. In each parallel end plane, enclose the circle with a square and draw the projected ellipse through the four side midpoints. Join its silhouette tangencies with lines parallel to the shell axis.

Reasoning

This isolates the cylinder primitive: the shell is defined by its length along one axis and its circular cross-section, which becomes an ellipse in isometric view.

Check

Both end ellipses should have the same shape and orientation, and the connecting lines should be parallel to the length axis.

Draw Isometric Heat Exchanger

Answer | Task 2 of 4 | A4

Prompt

Task 2: draw a cylindrical shell with a box support beneath it, showing how the box meets the shell.

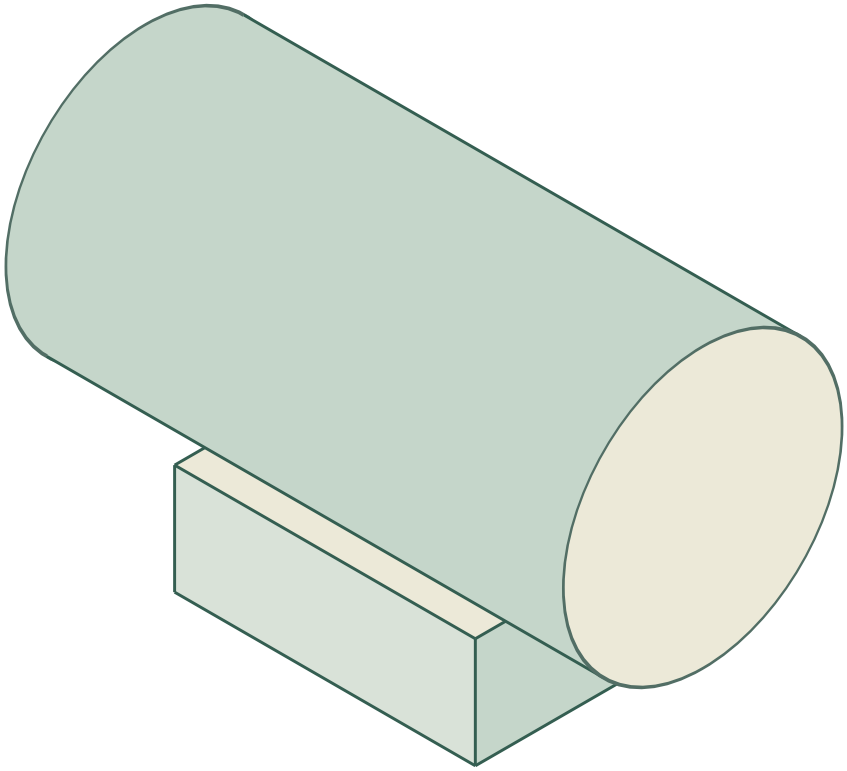

Answer

Draw the shell as in Task 1. Below it, mark a box footprint on the isometric ground plane, raise vertical edges, and close the top face so it touches the underside of the shell. Keep all box edges parallel to the isometric axes.

Reasoning

The support is a box component; its footprint and vertical edges must follow the isometric axes, and its top face should meet the curved underside of the shell.

Check

The box edges should be parallel to the three axes, and the top face should sit against the shell without gaps or overlaps.

Draw Isometric Heat Exchanger

Answer | Task 3 of 4 | A4

Prompt

Task 3: draw a cylindrical shell with one nozzle on top and one nozzle on the side, each as a short cylinder.

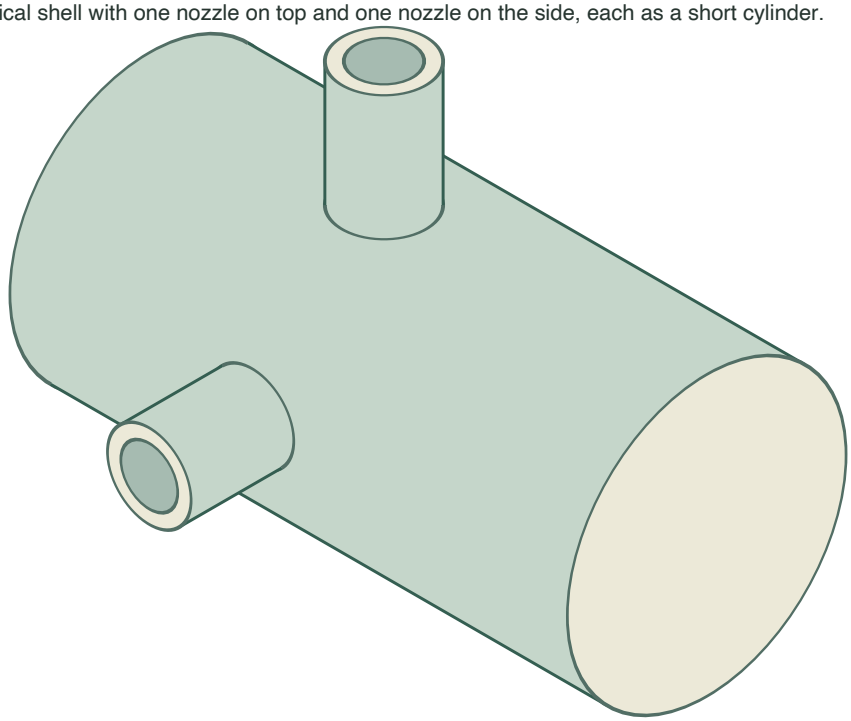

Answer

Draw a short upright nozzle on top and a short nozzle aimed out from the side. Draw an exposed elliptical rim perpendicular to each axis. Use a matching construction ellipse at each base and omit any part that's hidden behind the shell.

Reasoning

Each nozzle is a small cylinder; its axis must be parallel to one isometric axis so its two ellipses stay consistent and its base sits on the shell surface.

Check

Each nozzle's two ellipses should match in shape, and each nozzle axis should be parallel to one of the three isometric axes.

Draw Isometric Heat Exchanger

Prompt

Task 4: draw a complete heat exchanger plate combining the shell, a box support, and two nozzles, then check the whole drawing.

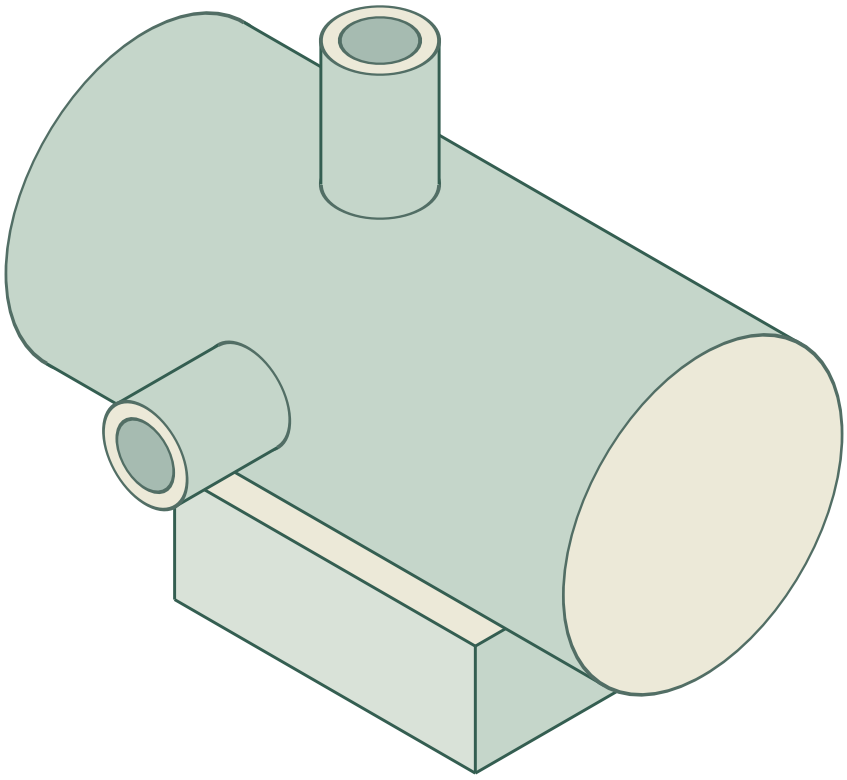

Answer

Combine the constructions from Tasks 1 to 3: shell with end ellipses, box support beneath, and two nozzles on the shell. Check that all long edges are parallel to the isometric axes, that all ellipses of the same circular feature match, and that components meet cleanly.

Reasoning

A complete plate requires consistent use of the three axes and consistent ellipse construction across all cylindrical features.

Check

Check box edges and cylinder length directions against the axes. Compare parallel end ellipses for each cylinder. Inspect support and nozzle contact on the visible outline.