Draw Pump Isometric Drawing

Answer | Task 1 of 4 | A4

Prompt

Task 1: draw a pump with a box casing, one inlet on the front face, one outlet on the right face, and a flat base, on isometric axes.

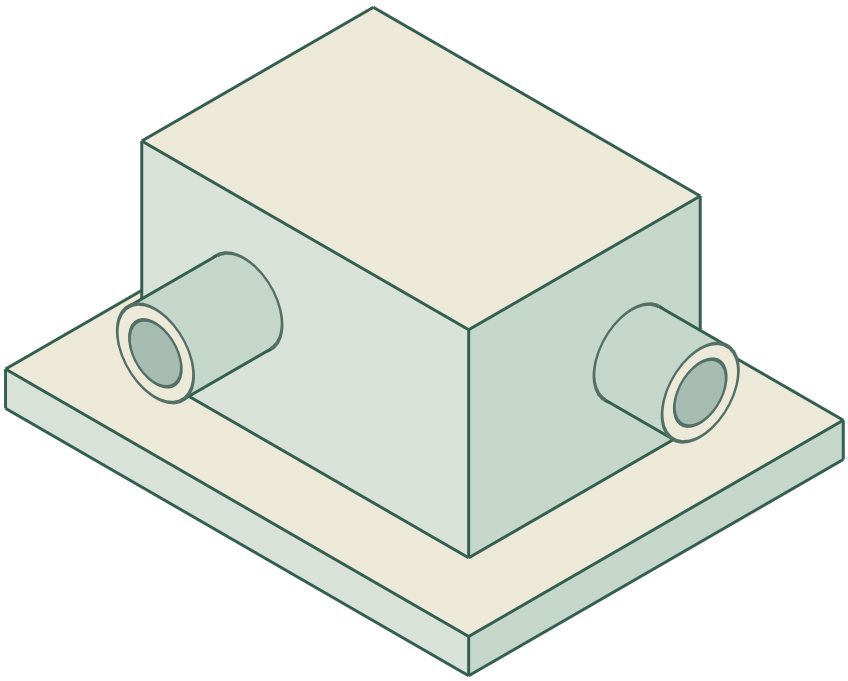

Answer

Draw the three isometric axes, then the axis box. Draw the base as a flat box at the bottom. Draw the casing as a box on the base. Draw the inlet as a short cylinder on the front face with an ellipse at its end. Draw the outlet as a short cylinder on the right face with an ellipse at its end. Erase the axis box.

Reasoning

The front and right faces are both visible in isometric, so placing the inlet and outlet there keeps both readable. The base is drawn first so the casing sits on it.

Check

Check the straight box edges and pipe directions against the axes. The inlet and outlet sit on separate front and right faces and the casing touches the base.

Draw Pump Isometric Drawing

Answer | Task 2 of 4 | A4

Prompt

Task 2: draw a pump with a taller casing, one inlet on the left face, one outlet on the left face above the inlet, and a flat base, on isometric axes.

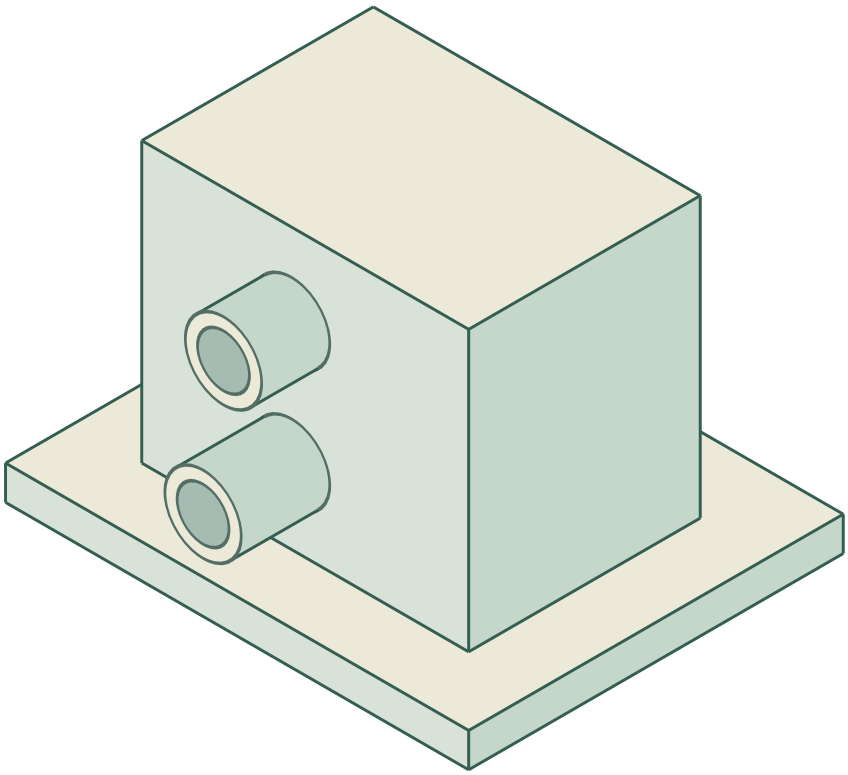

Answer

Draw the axes and axis box. Draw the base. Draw a taller casing box on the base. Draw the inlet as a short cylinder on the left face near the bottom, and the outlet as a short cylinder on the left face above it, each with an ellipse at its end. Erase the axis box.

Reasoning

Two pipes on the same face are separated vertically so they do not overlap. The taller casing gives room for both.

Check

Confirm both pipes are separate on the left face. Compare the straight casing edges and pipe lengths with the axes and check that the casing touches the base.

Draw Pump Isometric Drawing

Answer | Task 3 of 4 | A4

Prompt

Task 3: draw a pump with a wide casing, one inlet on the top face, one outlet on the front face, and a base wider than the casing, on isometric axes.

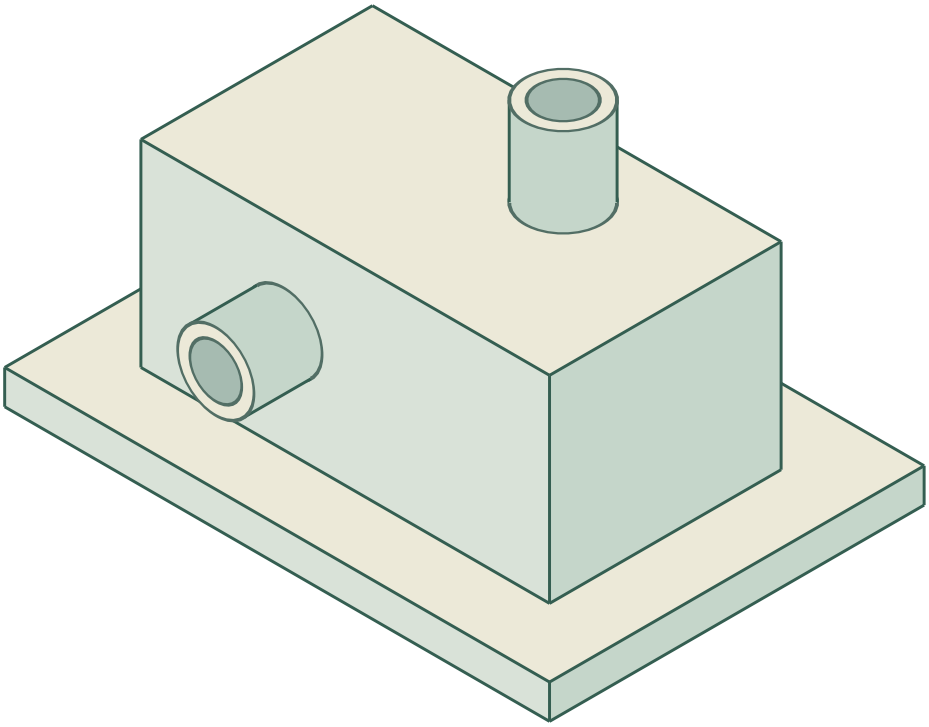

Answer

Draw the axes and axis box. Draw a wide base box. Draw a wide casing box on the base, narrower than the base. Draw the inlet as a short cylinder on the top face with an ellipse at its end. Draw the outlet as a short cylinder on the front face with an ellipse at its end. Erase the axis box.

Reasoning

A base wider than the casing shows the pump standing on a foot. The inlet on top and outlet on the front keep the two pipes on different faces.

Check

Confirm that the base is wider than the casing. Check the specified two faces, the straight box edges and the pipe directions.

Draw Pump Isometric Drawing

Answer | Task 4 of 4 | A4

Prompt

Task 4: draw a pump with a box casing, one inlet on the right face, one outlet on the top face, and a base with a visible front edge, on isometric axes.

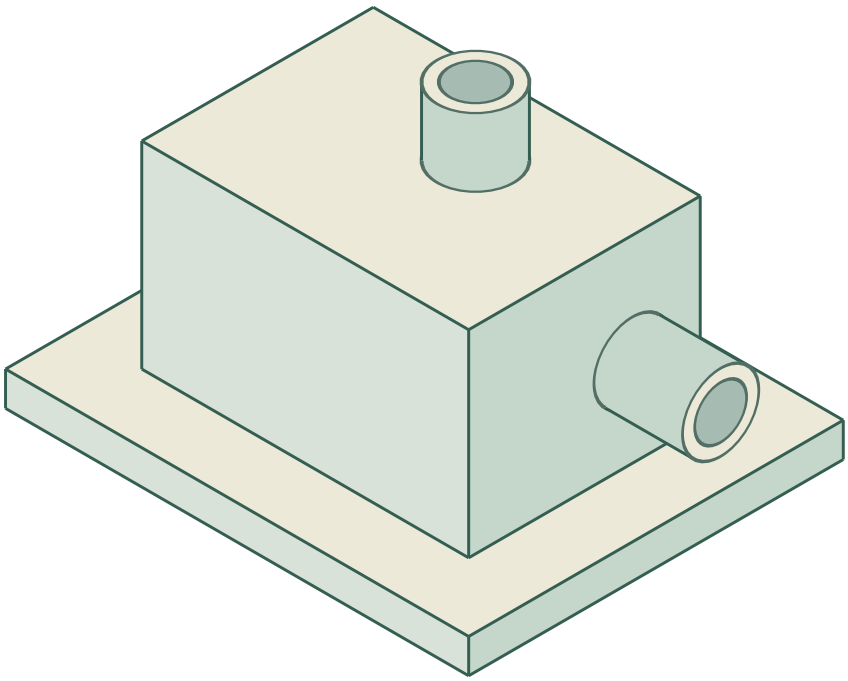

Answer

Draw the axes and axis box. Draw the base as a flat box with a clear front edge. Draw the casing box on the base. Draw the inlet as a short cylinder on the right face with an ellipse at its end. Draw the outlet as a short cylinder on the top face with an ellipse at its end. Erase the axis box.

Reasoning

A visible front edge on the base makes the foot read clearly. The inlet and outlet on different faces keep the pump readable.

Check

Check the visible front lip of the base, the right and top ports, and that the straight box edges and pipe directions agree with the axes.