Draw Pump Isometric Drawing

Reference | Construction study | LETTER

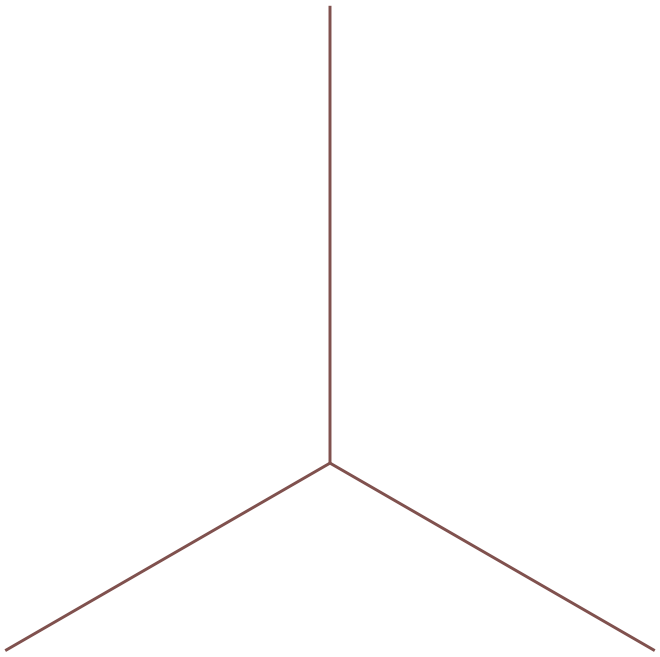

Draw Pump Isometric Drawing

Reference I Construction study I LETTER

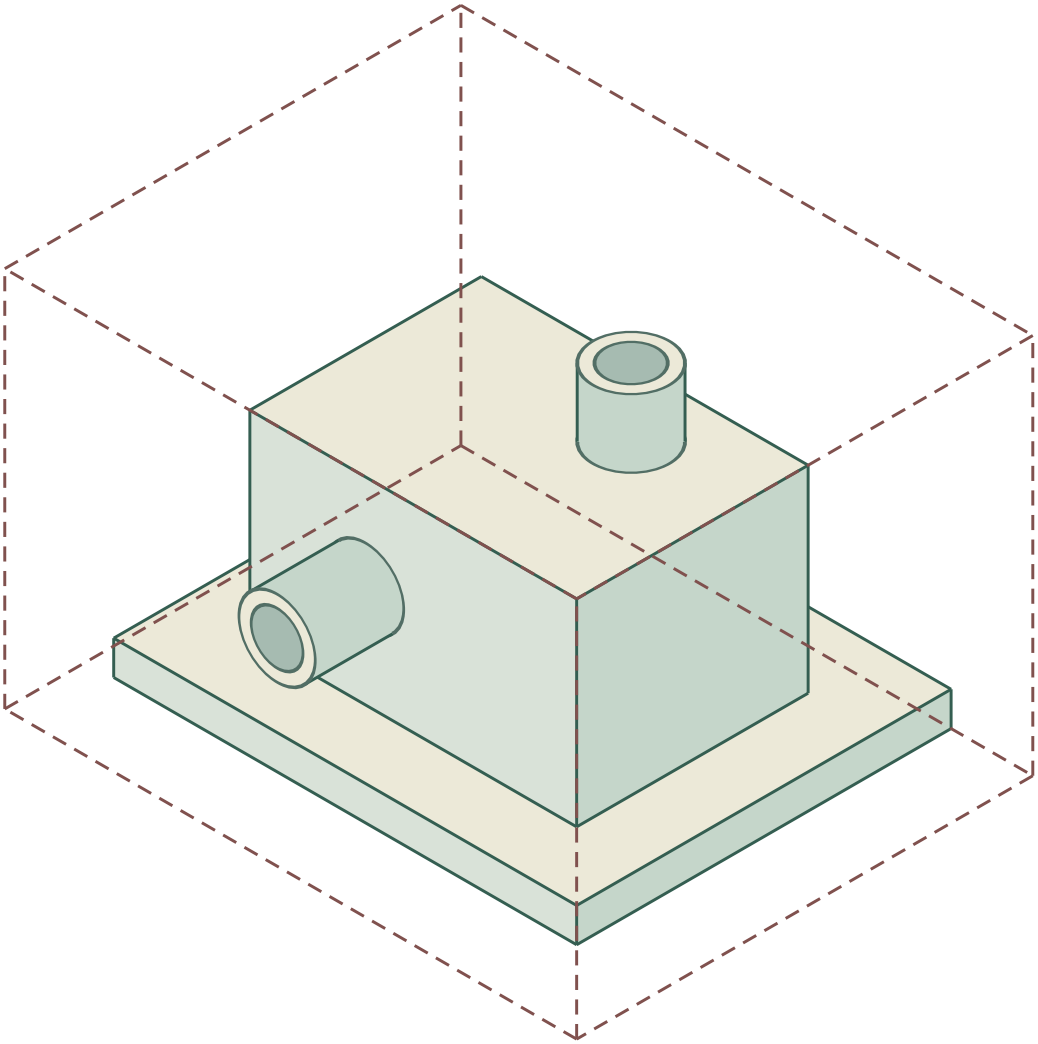

Draw Pump Isometric Drawing

Reference | Construction study | LETTER

Prompt

Worked example: draw a pump with a box casing, one inlet on the left face, one outlet on the top face, and a flat base, all on isometric axes.

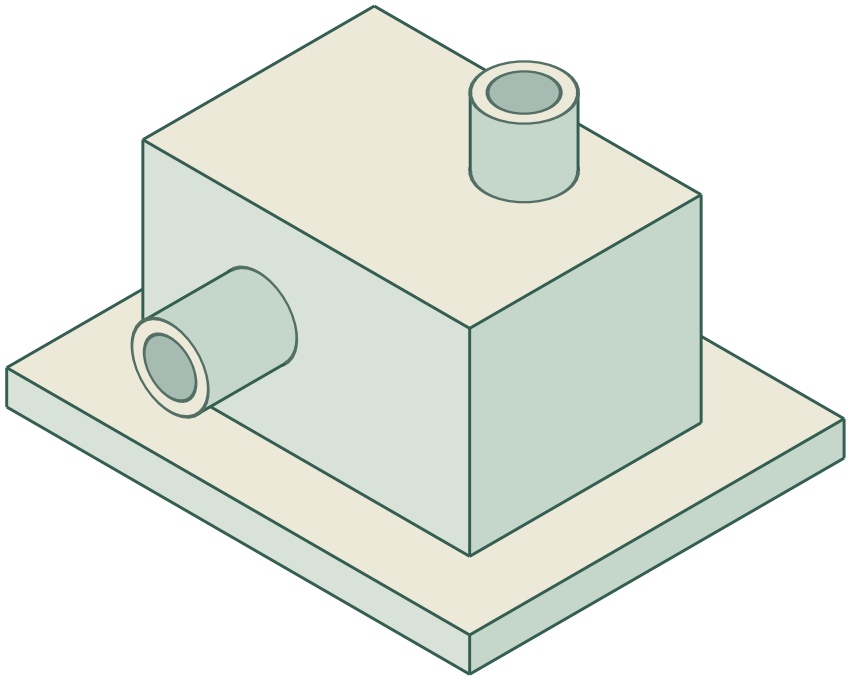

Answer

Draw the three axis directions and a light bounding box. Set the casing on its thin base. Place a short inlet on the left face and an outlet on the top. Draw projected oval rims at the exposed openings. Remove only the enclosing construction box for the final view.

Reasoning

The axis box fixes overall size and alignment before detail. The base is drawn first because the casing sits on it. The inlet and outlet are placed on different faces so the pump reads as a three-dimensional machine.

Check

Check that the straight box edges and the length of each pipe follow an axis direction. The inlet is on the left face, the outlet is on top and the casing meets the base.