Draw Isometric Scissors

Original prompt

Task 1: Draw only the isometric axis plate for a pair of scissors, marking the pivot point on the vertical axis and labeling the three axis directions.

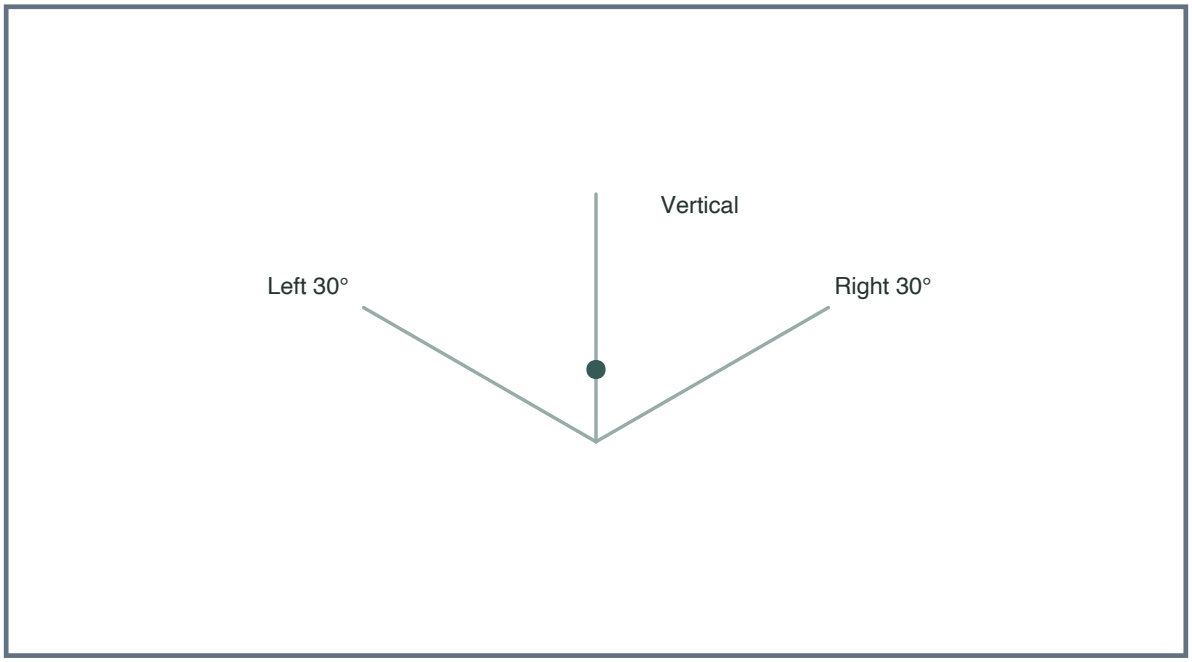

Answer

A vertical line, a line at 30 degrees up-left, and a line at 30 degrees up-right, all meeting at a common origin. A pivot point is marked on the vertical axis above the origin. The three directions are labeled vertical, left 30-degree, and right 30-degree.

Reasoning

The axis plate records the slanted shaft directions and the vertical direction. Marking the pivot above the origin fixes the height of the crossing point before drawing either blade.

Check

Confirm the two slanted lines are at 30 degrees above horizontal and mirror each other, and that the pivot lies on the vertical axis.

Draw Isometric Scissors

Original prompt

Task 2: On a prepared axis plate, draw one blade as an isometric wedge along the left 30-degree axis, including its thickness offset.

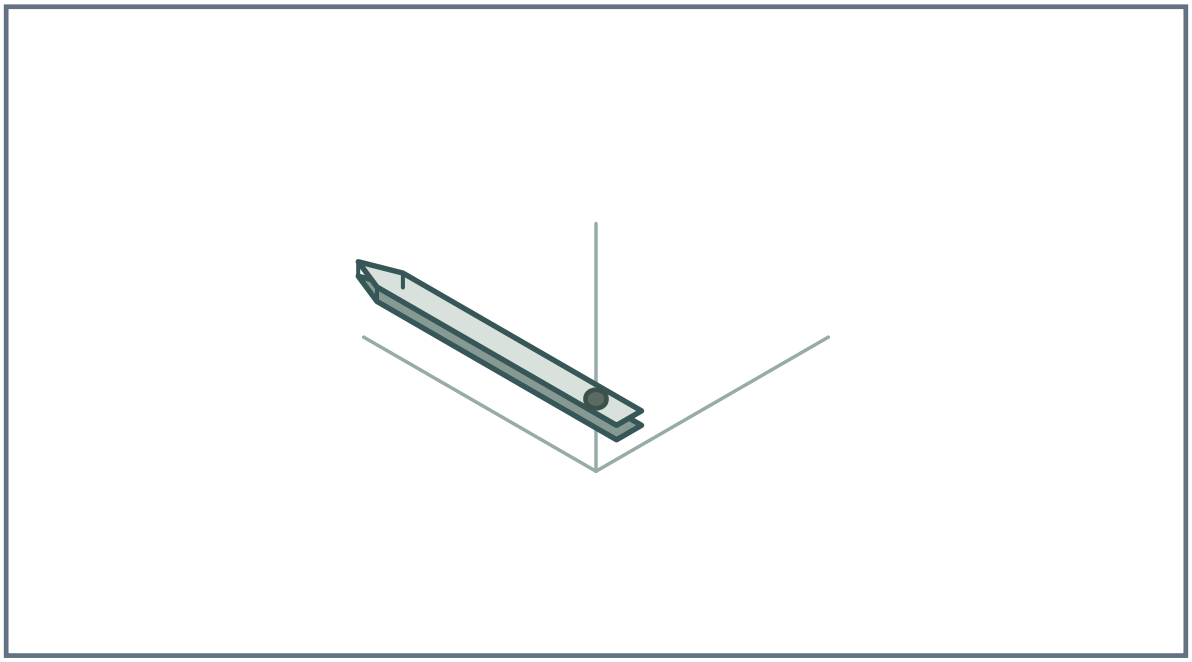

Answer

A narrow blade with two long parallel sides along the left 30-degree direction and a short taper at the end away from the pivot. Copy the outline a little lower along the vertical axis and join its corresponding corners.

Reasoning

The long edges establish the projected shaft and the short sides taper to the tip. Offsetting the same outline vertically gives the sample blade a consistent thickness cue.

Check

Check that the long edges are parallel to the left 30-degree axis and that every thickness connector runs vertically.

Draw Isometric Scissors

Original prompt

Task 3: Add the second blade so the two blades cross at the pivot and form a mirrored pair.

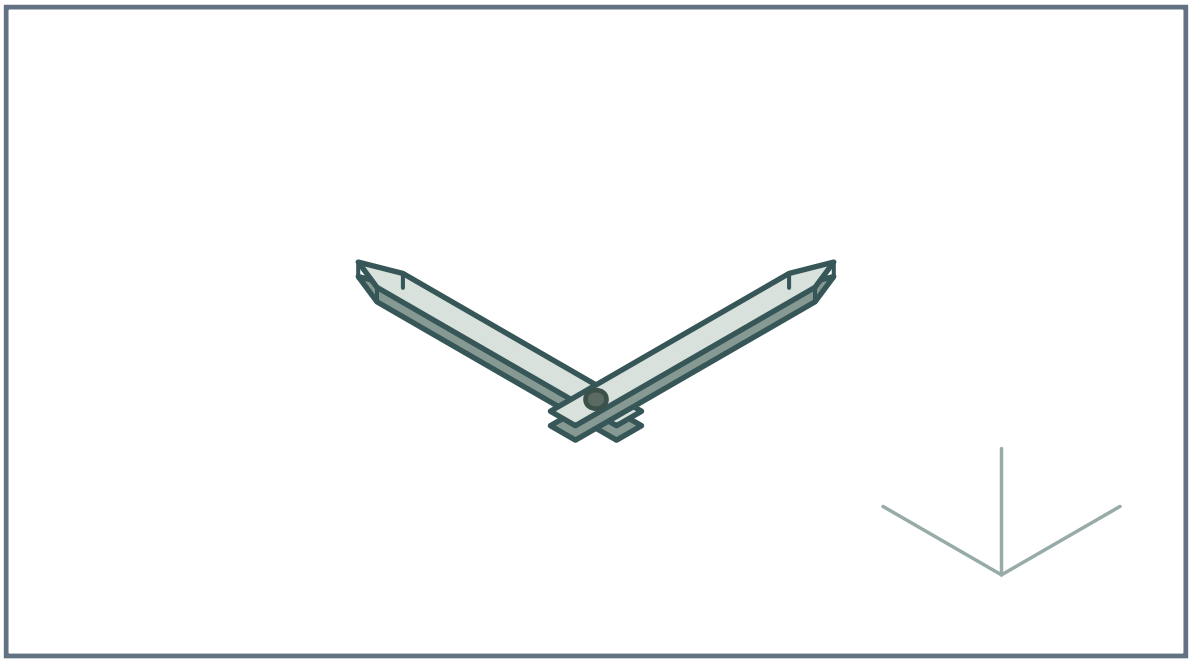

Answer

A second tapered blade with its two long sides along the right 30-degree direction and a vertical thickness offset. It mirrors the first blade across the vertical line through their common pivot.

Reasoning

Mirroring the first blade about the vertical axis keeps the pair balanced and ensures both blades meet at the pivot. Using the right 30-degree axis keeps the second blade in the same projection.

Check

Confirm the two blades are mirror images about the vertical axis, cross at the pivot, and that all long edges are parallel to an axis.

Draw Isometric Scissors

Original prompt

Task 4: Complete the scissors by adding two handle loops and then perform the projection check.

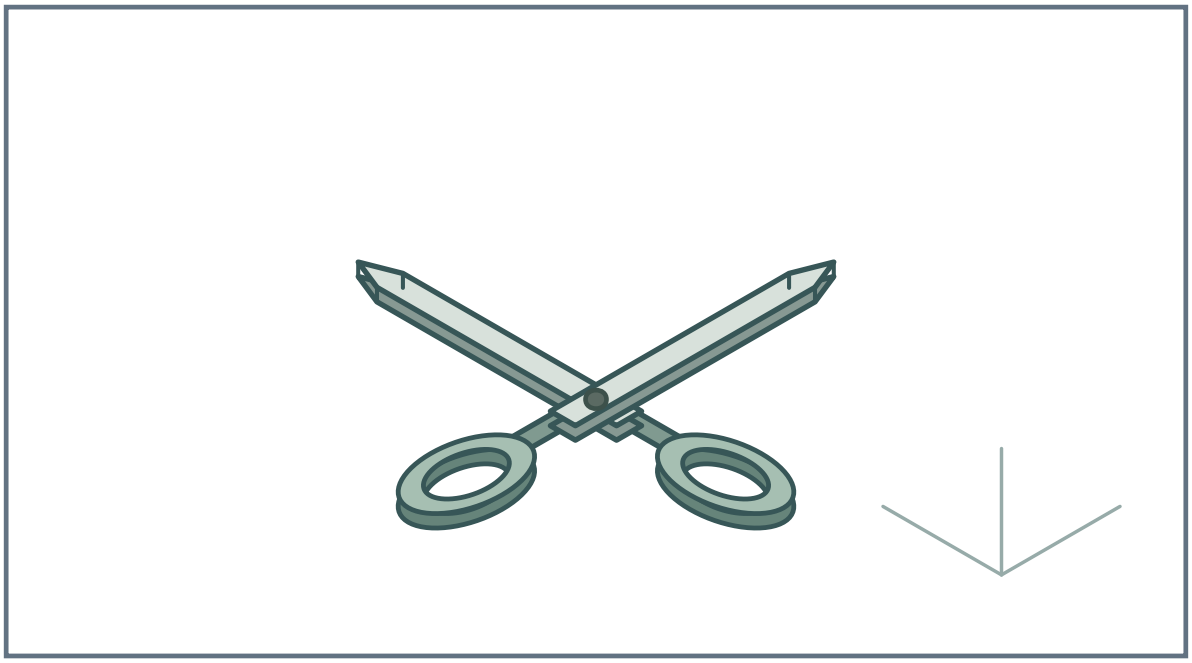

Answer

Two flattened handle loops, one attached behind each blade. Each loop's long direction follows its blade, with a short vertical offset for thickness. Check the blade shafts against their guide directions, the mirrored outlines against their common pivot, and the thickness connectors against the vertical guide.

Reasoning

Handles are loops in the same projection, so their long direction must follow the blade's axis. The final check verifies axis consistency, mirror symmetry, pivot alignment, and vertical thickness cues.

Check

Check both long shaft sides against each blade's 30-degree direction. Check the two mirror outlines at their shared pivot and the vertical offsets of blades and loops.