Draw a Tree House in Two-Point Perspective

Answer | Task 1 of 4 | LETTER

Original prompt

Task 1: Draw a horizon line, mark VP-L and VP-R, and sketch one platform slab in two-point perspective.

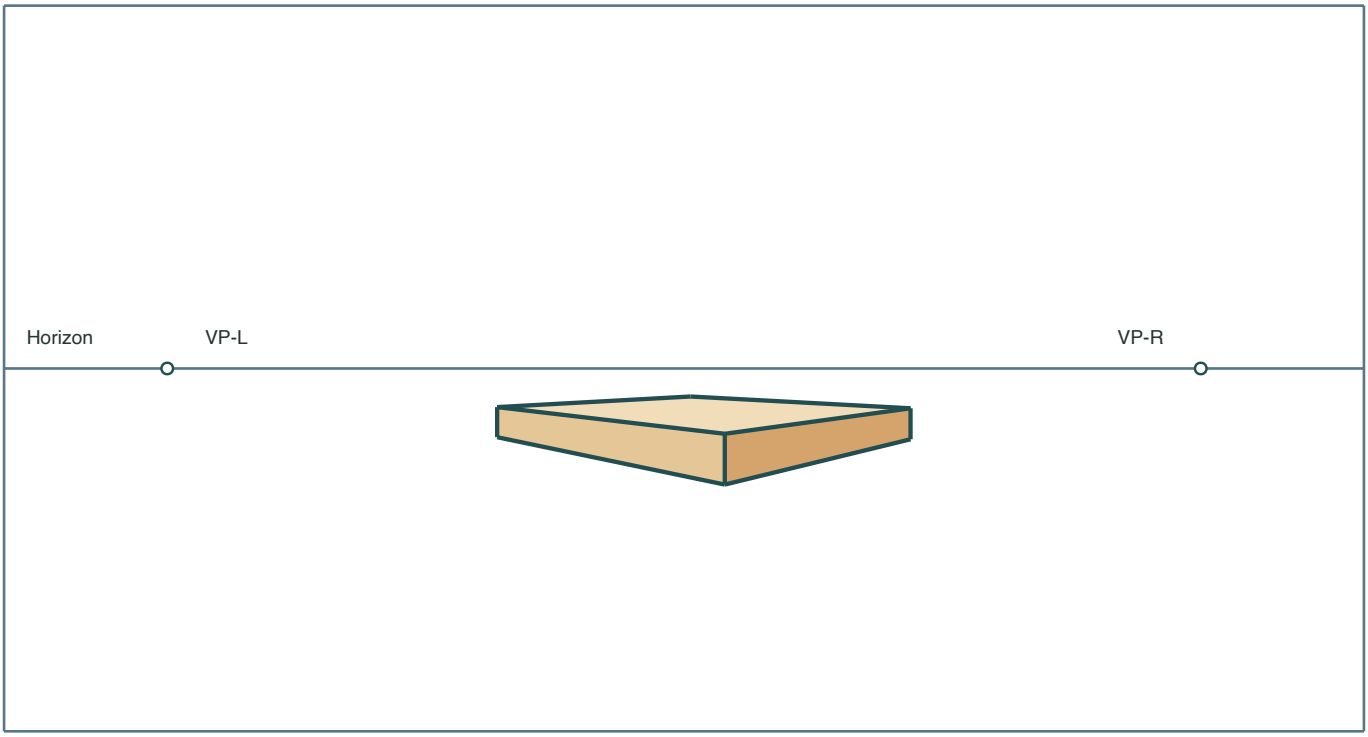

Answer

A correct sketch shows a horizon line with two marked vanishing points and a flat slab whose left-going edges meet VP-L and right-going edges meet VP-R, with vertical thickness edges staying vertical.

Reasoning

The platform is the base of the tree house, so its edges must follow the two receding directions before any cabin is added.

Check

Trace each slab edge to its vanishing point and confirm the slab's vertical edges are vertical.

Draw a Tree House in Two-Point Perspective

Original prompt

Task 2: From a given platform outline, construct the cabin walls so horizontal edges meet VP-L or VP-R and verticals stay vertical.

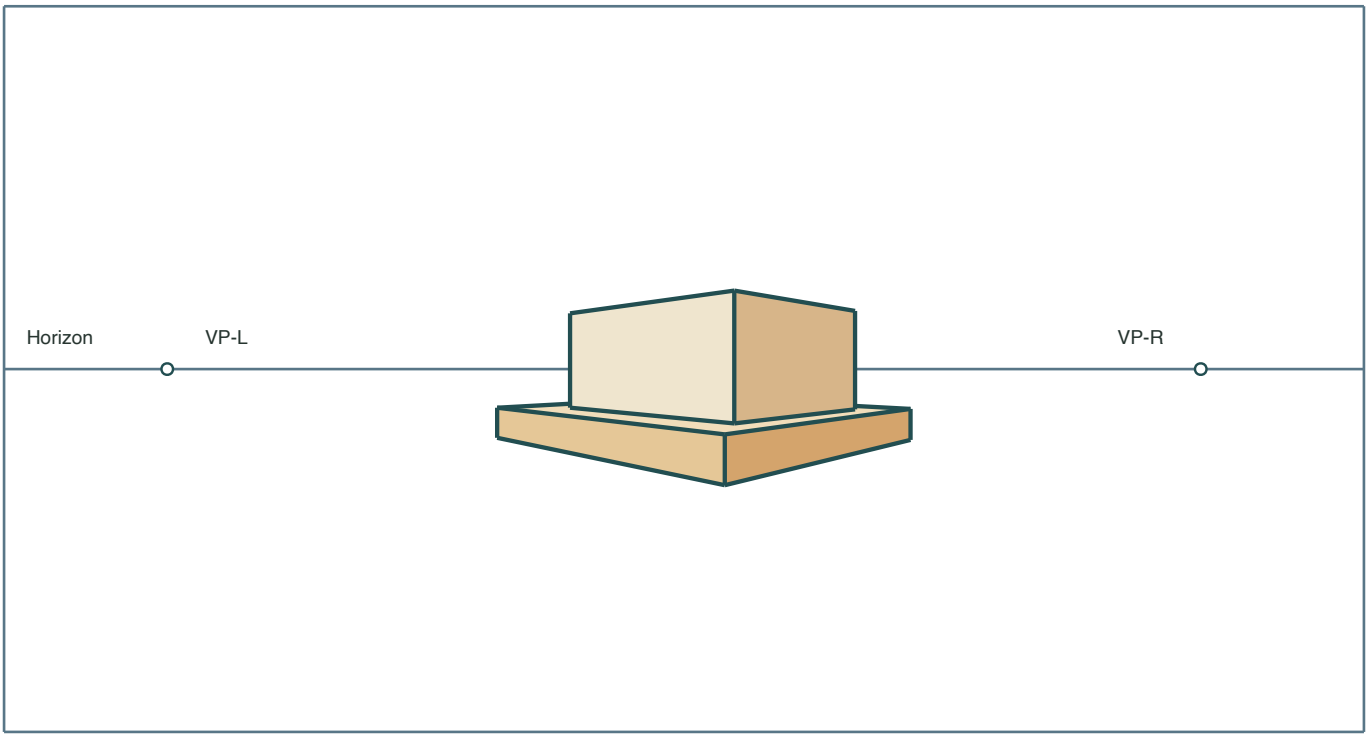

Answer

Use the given slab to sketch an inset cabin footprint in the same two directions. Raise upright corners from the footprint, then connect their visible tops and bottoms along the two vanishing directions. The model leaves a narrow exposed ledge around the cabin.

Reasoning

Walls inherit the platform's two receding directions, so their horizontal edges must meet the same vanishing points.

Check

Check that each wall's top and bottom horizontal edges meet the correct VP and that corner posts are vertical.

Draw a Tree House in Two-Point Perspective

Original prompt

Task 3: Add roof planes to a given cabin, sending ridge and eave lines to the correct vanishing points.

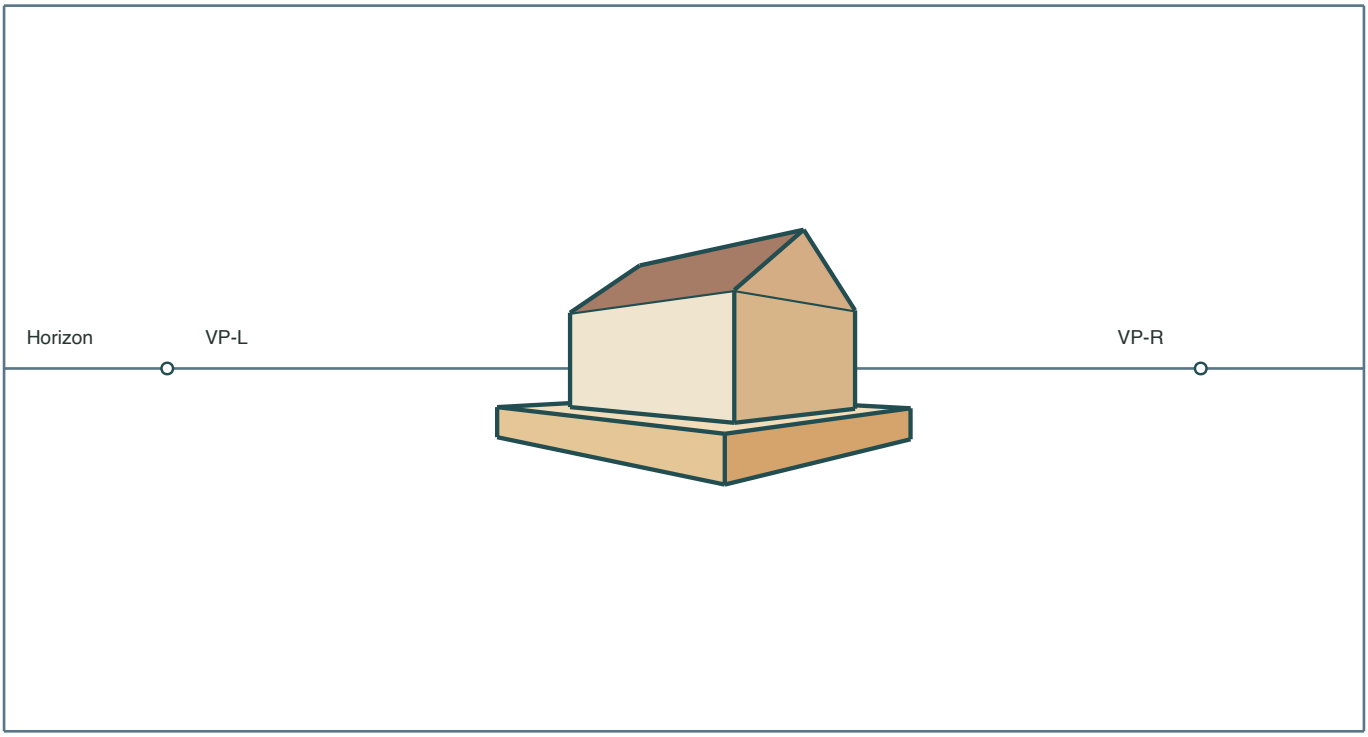

Answer

The model roof has a ridge and level eaves that run toward VP-L. The visible roof face meets the nearer eave, and the two sloping gable edges join the two ends of the near gable to the ridge. From this viewpoint the far slope is mostly hidden.

Reasoning

Roof planes are flat surfaces in the same perspective system, so their horizontal lines must follow the two vanishing points.

Check

Trace ridge and eave lines to their VPs and confirm the roof slopes connect ridge to eaves without crossing.

Draw a Tree House in Two-Point Perspective

Answer | Task 4 of 4 | LETTER

Original prompt

Task 4: On a practice grid, redraw a complete tree house in two-point perspective and check every receding edge.

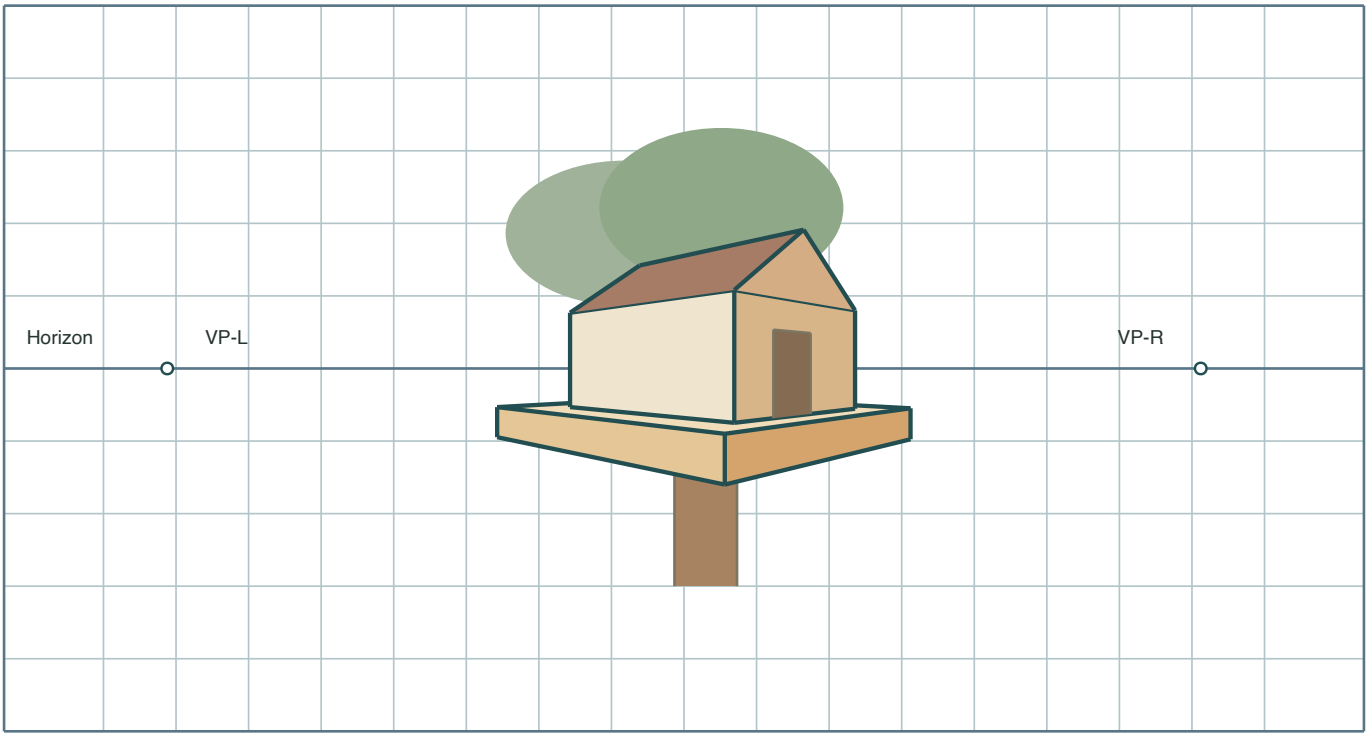

Answer

The model on the grid shows both vanishing points, an upright trunk, a two-direction platform, the inset cabin and a gable roof. Level edges on each axis converge to their assigned point on the horizon. The sloping roof ends connect to the ridge and eaves, and the upright edges remain vertical.

Reasoning

The grid helps align receding lines, and the final check confirms the whole construction is consistent.

Check

Check that each receding edge representing a level line reaches the correct vanishing point. Check upright edges for verticality, and roof slopes for connections to ridge and eaves.