Draw Arches in Perspective

Student | Task 1 of 4 | LETTER

Original prompt

Task 1: Draw the front face of a round arch — a true semicircular span on a horizontal springing line with two vertical supports. Do not add depth.

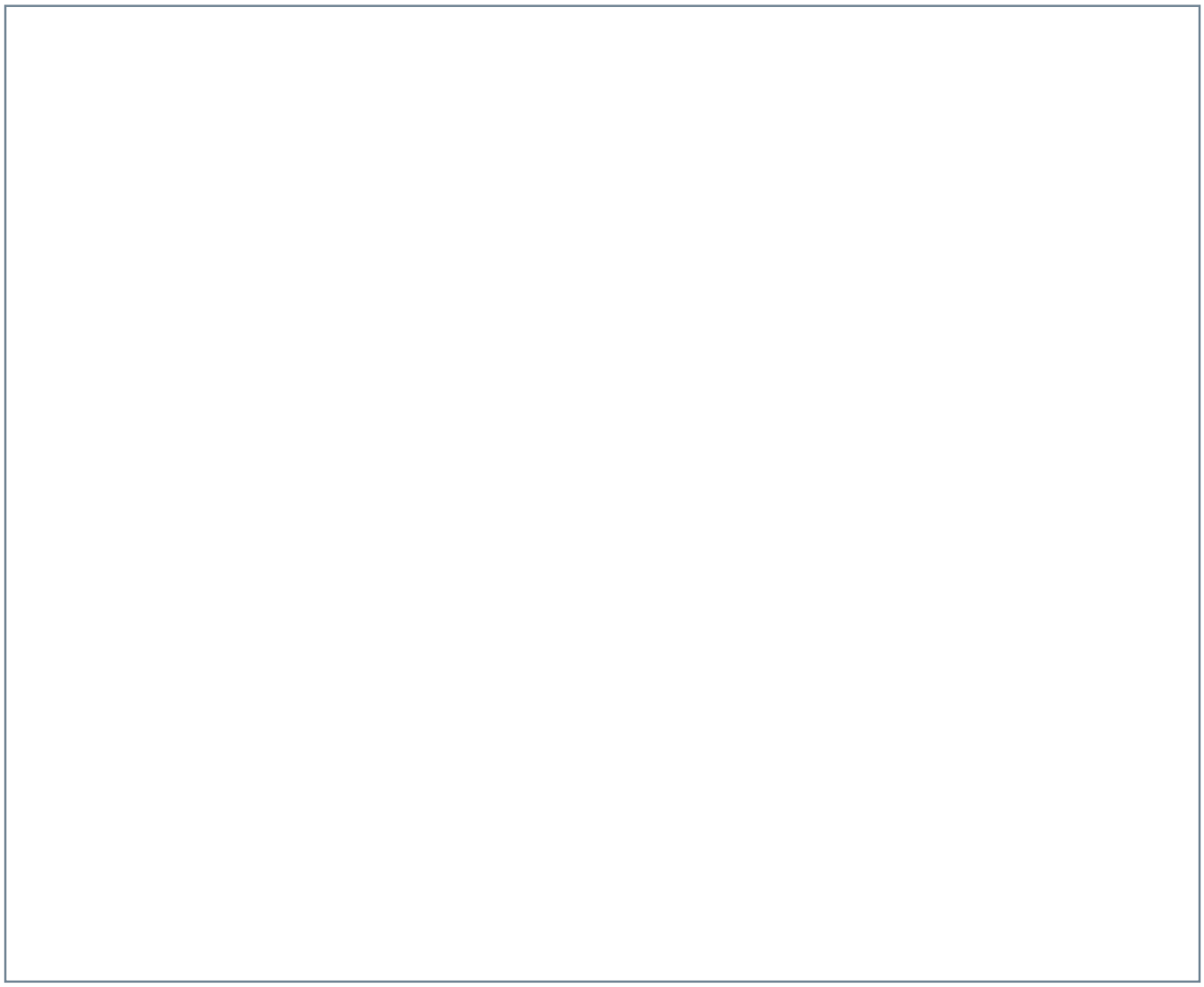

Draw Arches in Perspective

Student | Task 2 of 4 | LETTER

Original prompt

Task 2: Starting from a front semicircle, choose a vanishing point and a depth, then project the two springing points and the crown to build the back edge of the arch.

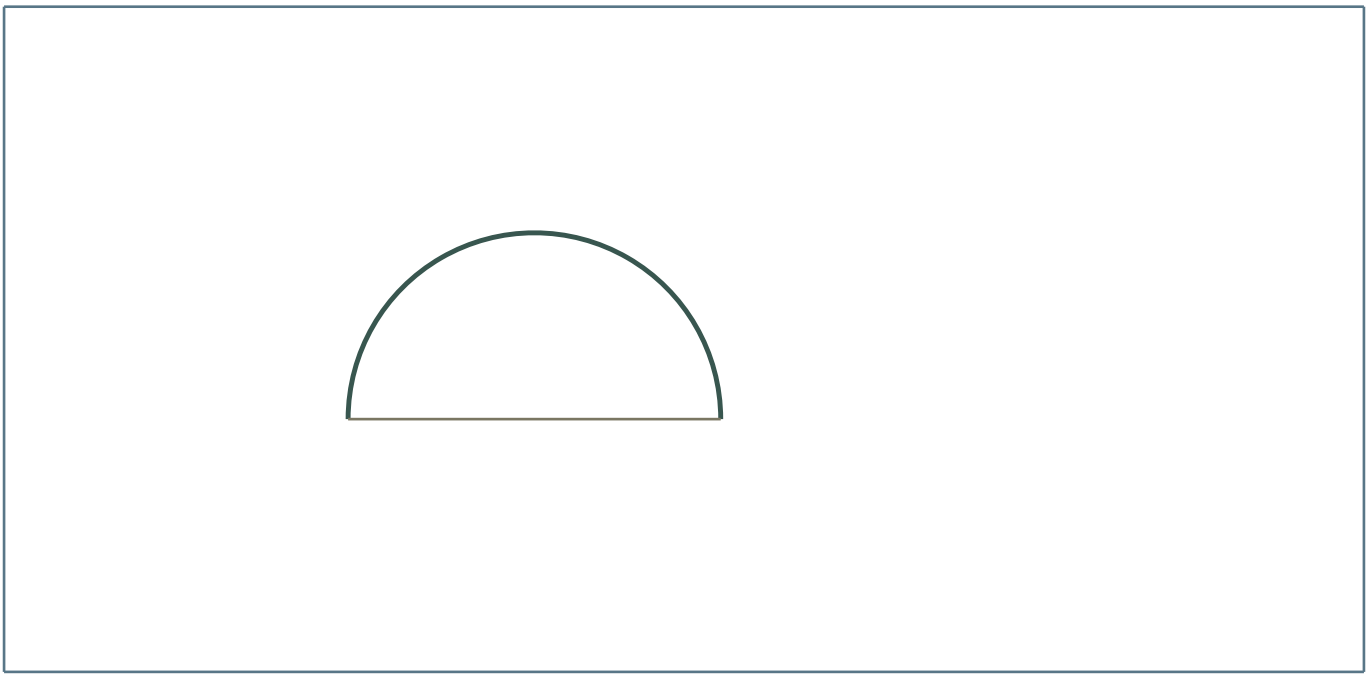

Your construction and visual check

Draw Arches in Perspective

Student | Task 3 of 4 | LETTER

Original prompt

Task 3: Complete the arch's thickness by connecting front and back edges, and add the vertical supports. Then redraw the whole arch slightly larger, keeping the same construction order.

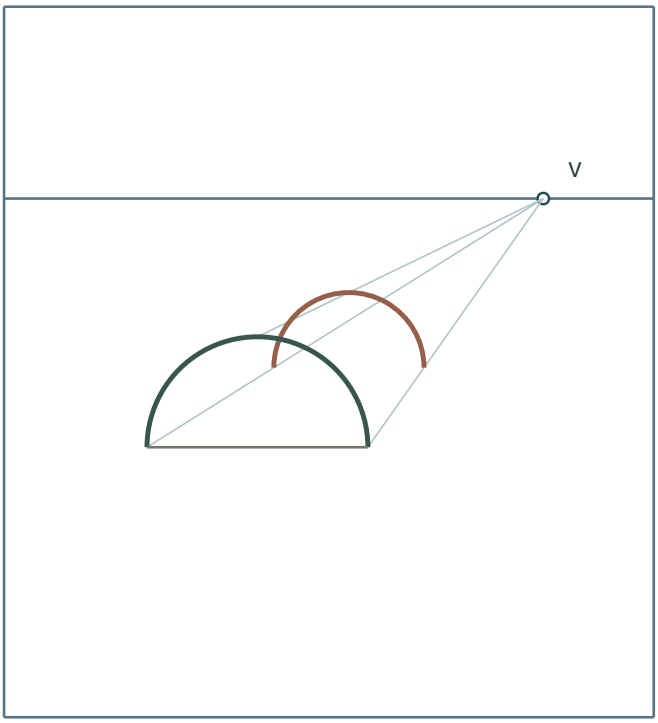

Your construction and visual check

Draw Arches in Perspective

Student | Task 4 of 4 | LETTER

Original prompt

Task 4: Draw a second arch beside the first, sharing the same vanishing point and horizon but with a different chosen depth. Compare the two back curves.

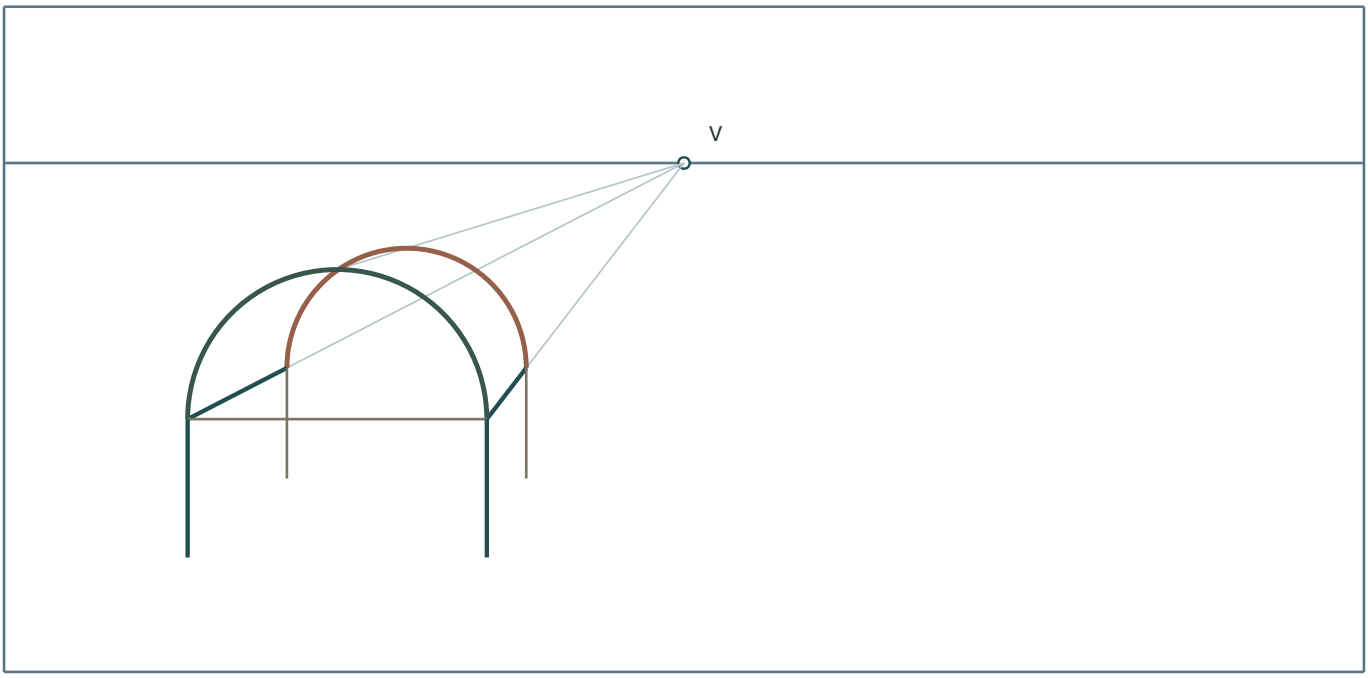

Your construction and visual check