Draw a Dining Room in One-Point Perspective

Answer | Task 1 of 4 | A4

Original prompt

Task 1 (observation): Using the reference picture of a one-point dining room, mark on a blank sheet where the room's receding lines and the table's long edges appear to meet, and state whether they share one meeting region.



The marked region is an estimate from the visible ceiling, table and lower wall edges.

Answer

The side-wall, floor, and table long edges converge toward one region on the horizon line; the table's short edges stay parallel to the back wall.

Reasoning

In a one-point view the viewing direction is square to the back wall, so all edges parallel to that direction converge at one point while edges parallel to the back wall do not converge.

Check

Compare your marked meeting region with the horizon line; if the marks scatter, identify which edges are not parallel to the viewing direction.

Draw a Dining Room in One-Point Perspective

Original prompt

Task 2 (construction): On a blank sheet, draw a horizon line, one vanishing point, a back-wall rectangle, and the four receding corner lines for a dining room.

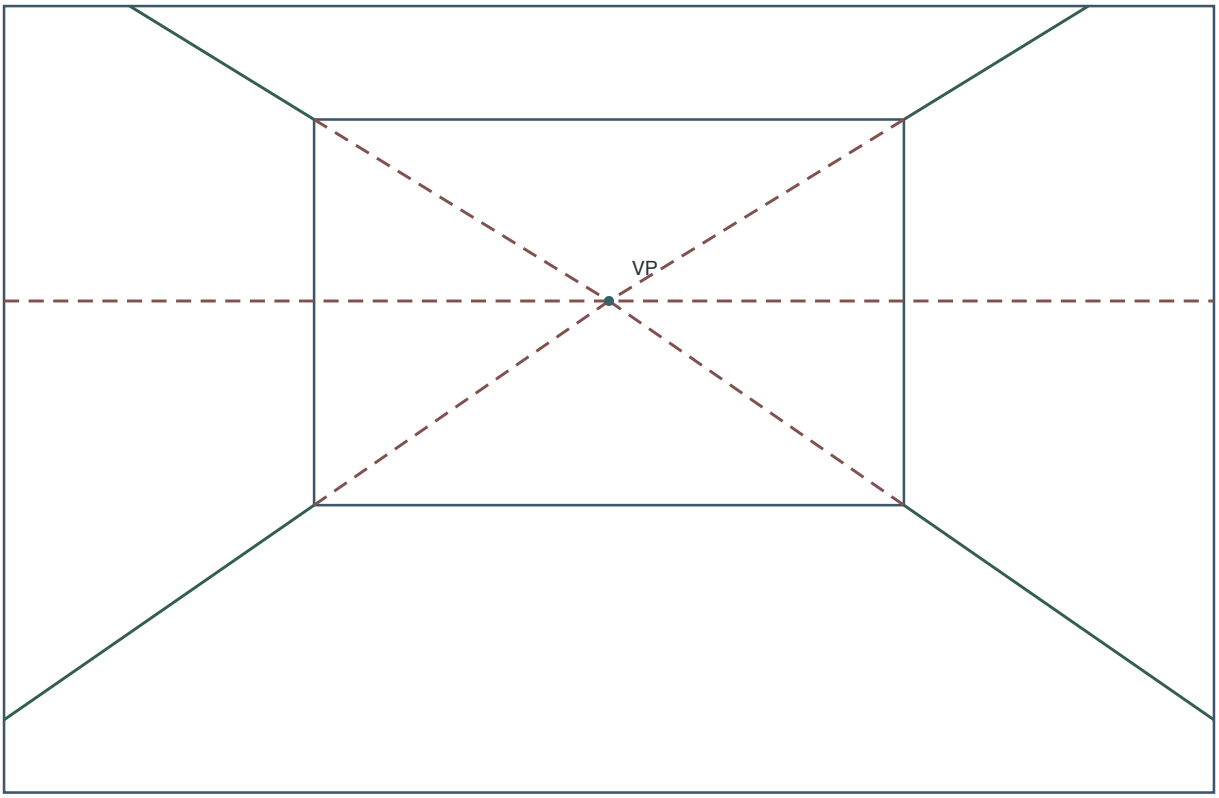

The outline represents the edges of the drawing sheet.

Answer

A horizon line with one marked vanishing point, a back-wall rectangle, and four lines from its corners to the sheet edges, all passing through the vanishing point.

Reasoning

The back wall is drawn square to the viewer, so its corners are the starting points for the side-wall, floor, and ceiling lines that recede to the single point.

Check

Lay a straightedge along each of the four corner lines; each should pass through the vanishing point.

Draw a Dining Room in One-Point Perspective

Original prompt

Task 3 (reference-guided redrawing): Redraw the table from the reference picture as a box-like form in your own room construction, with its top edges converging to your vanishing point and its legs vertical.

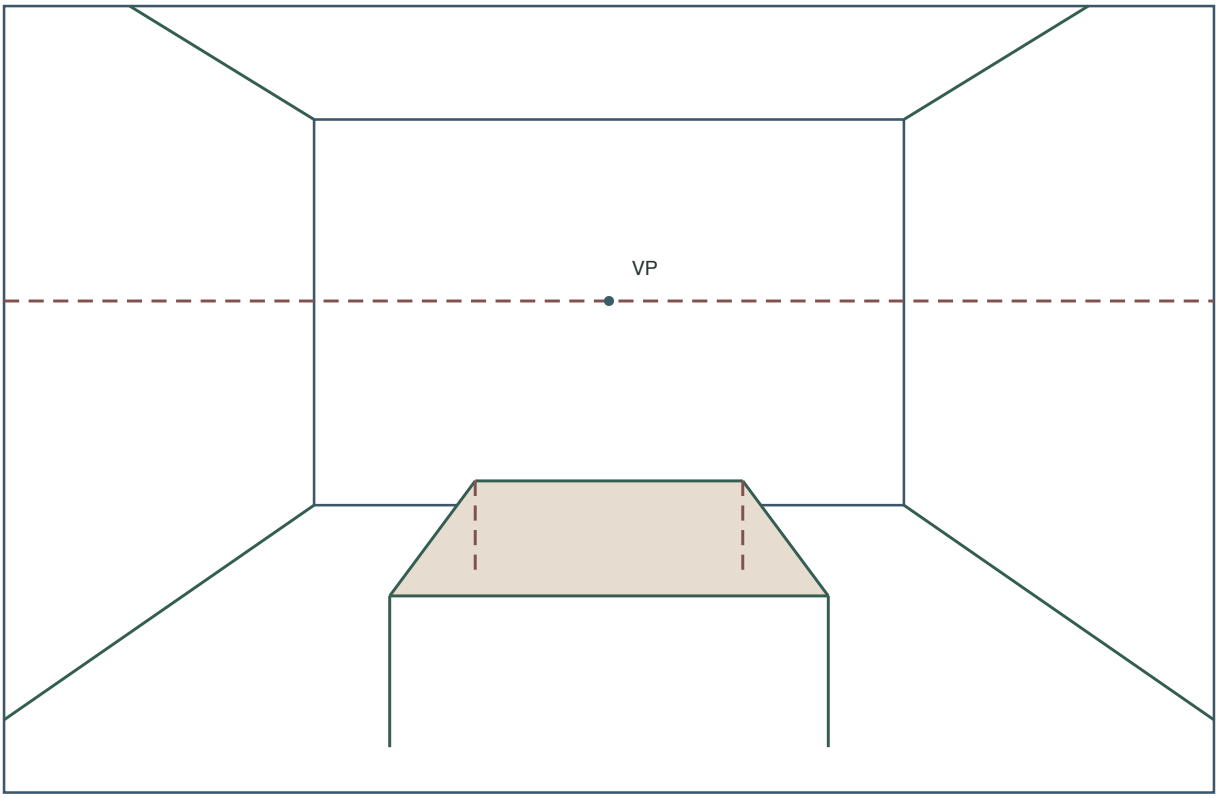

The dashed far legs show the construction under the table top.

Answer

A trapezoidal tabletop whose side edges meet the vanishing point and whose front and back edges are parallel to the back wall, with four vertical legs, near legs longer and far legs shorter.

Reasoning

Redrawing the table to your own vanishing point keeps it consistent with your room's depth rather than copying the reference's viewpoint.

Check

Extend the tabletop's side edges; they should meet your vanishing point, and the near edge should be longer than the far edge.

Draw a Dining Room in One-Point Perspective

Original prompt

Task 4 (visual checking): Review your completed plate and correct any line that does not converge to the vanishing point or any leg that is not vertical.

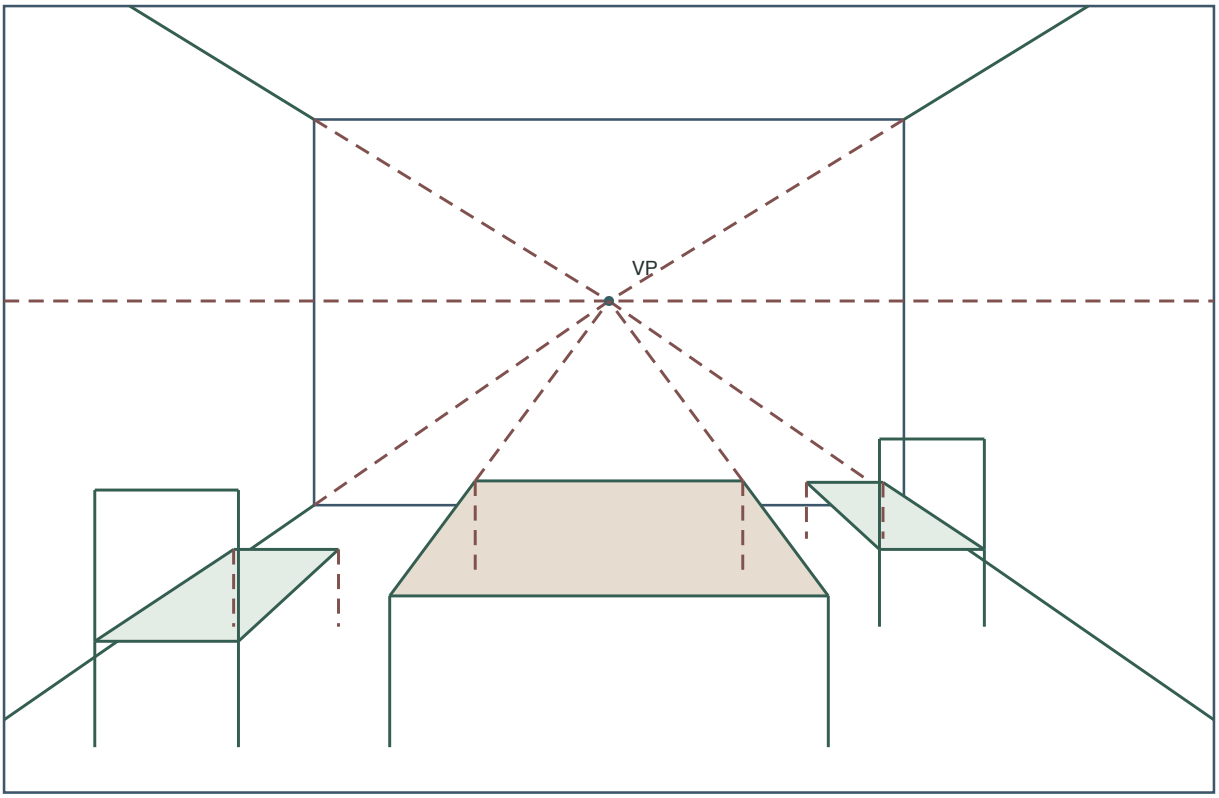

The dashed far legs show the construction under the table top.

Answer

A corrected plate in which all receding lines meet the single vanishing point, all legs are vertical, and the table and seating sit consistently within the room's depth.

Reasoning

A one-point plate is coherent only when every receding edge shares the same point; checking and correcting outliers restores that consistency.

Check

Trace each receding line with a straightedge to the vanishing point and confirm each leg is vertical against the sheet edge.