# One-Point Perspective Rubric



## Original prompt

Task 1 — Score a drawing with one horizon line, one marked vanishing point, all depth edges converging correctly, square front faces, and all forms sharing the same vanishing point.

Score A horizon/VP, B six receding edges, C two front faces, and D setup consistency; each is 0–3.

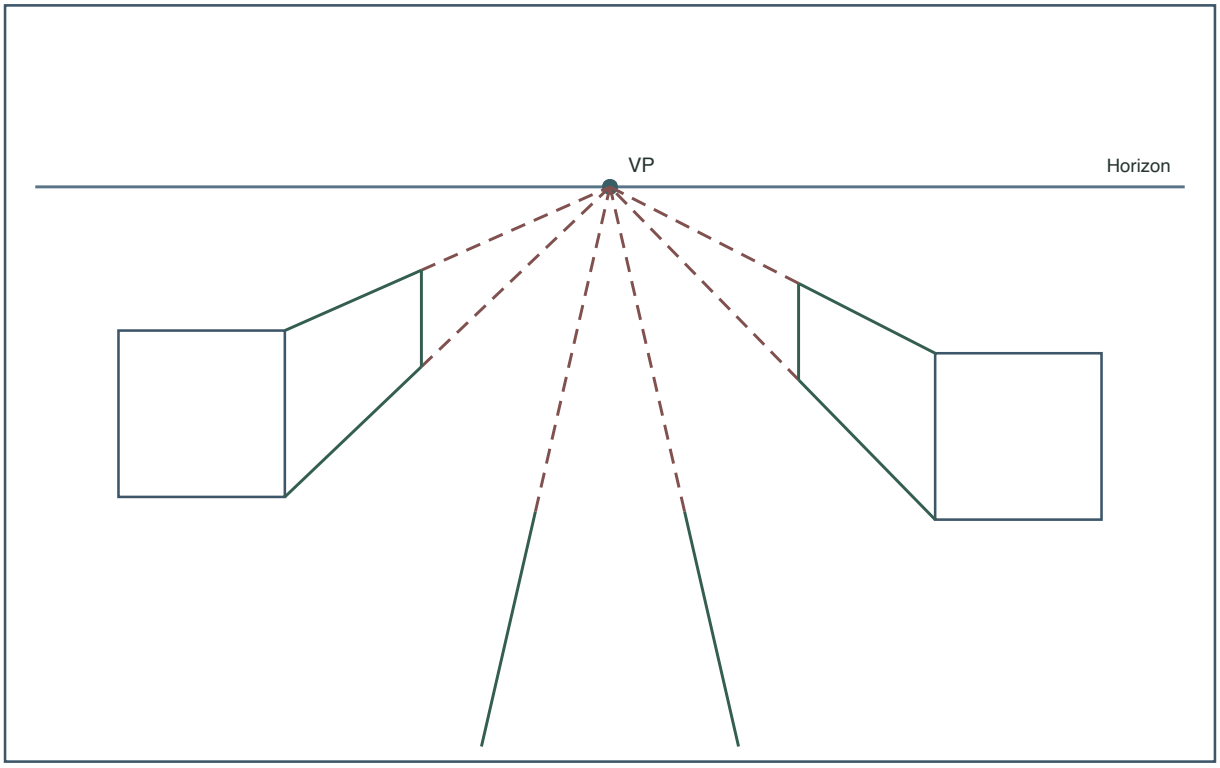


Score each criterion from 0 to 3. The total is out of 12.

| A Horizon/VP | B Six edges | C Faces | D Setup | Total/12 |
|---|---|---|---|---|
| 3 | 3 | 3 | 3 | 12 / 12 |

## Answer

A = 3, B = 3, C = 3, D = 3. Total = 12 of 12.

## Reasoning

Every criterion is fully met: one horizon and vanishing point, all depth edges converge, front faces are square, and all forms share the same setup.

## Check

Trace each receding edge toward the vanishing point; all should meet it, confirming full marks on B and D.

# One-Point Perspective Rubric

Answer I Task 2 of 4 I A4

## Original prompt

Task 2 — Score a two-building street drawing split evenly between two one-point setups. Each building has its own level horizon and marked vanishing point. In each building, all three shown depth edges meet its own point and its front face is square. Give each criterion a score, a reason, and the total, and name the criterion most affected by the split horizon.

Score A horizon/VP, B six receding edges, C two front faces, and D setup consistency; each is 0–3.

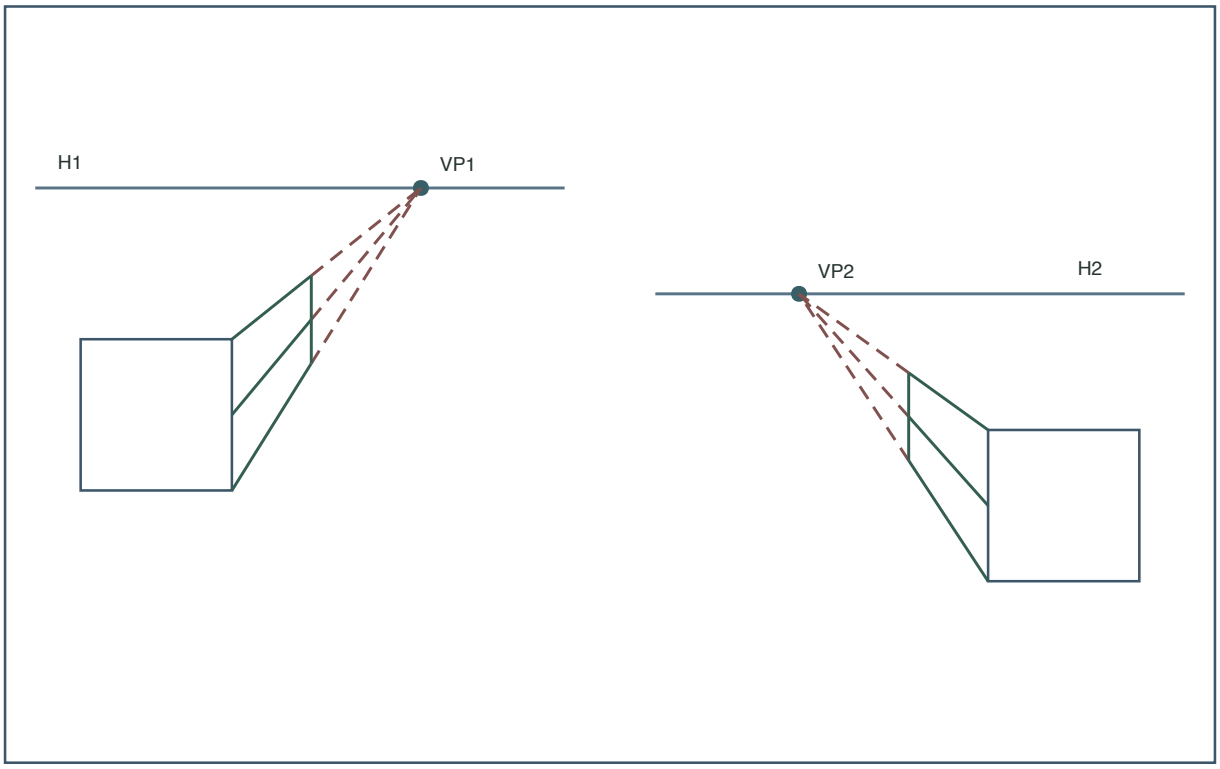


Score each criterion from 0 to 3. The total is out of 12.

| A Horizon/VP | B Six edges | C Faces | D Setup | Total/12 |
|---|---|---|---|---|
| 1 | 3 | 3 | 0 | 7 / 12 |

## Answer

A = 1, B = 3, C = 3, D = 0. Total = 7 of 12. Criterion D is most affected by the split horizon.

## Reasoning

The buildings have different horizon and vanishing-point pairs, so the drawing does not use one pair for the whole scene: A = 1 and D = 0. Each building's three receding edges meet its assigned point, giving 6 of 6 for B = 3. Both front faces are square, so C = 3. The total is 1 + 3 + 3 + 0 = 7.

## Check

List both horizon/point pairs. Check the three depth edges on each building against its own point, verify both square faces, then check whether one pair governs the whole drawing. Add 1 + 3 + 3 + 0 = 7.

# One-Point Perspective Rubric



## Original prompt

Task 3 — Score a drawing where the horizon and vanishing point are correct and all depth edges converge, but the front faces are drawn as slanted parallelograms instead of squares.

Score A horizon/VP, B six receding edges, C two front faces, and D setup consistency; each is 0–3.

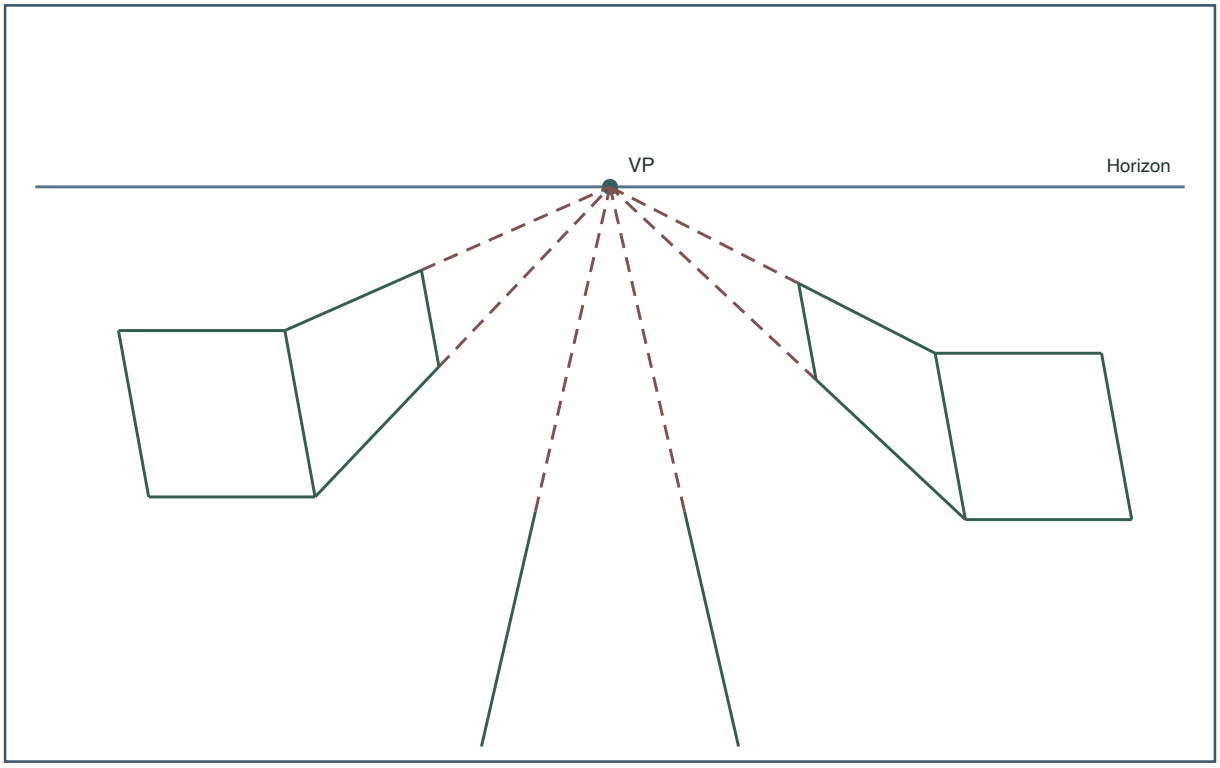


Score each criterion from 0 to 3. The total is out of 12.

| A Horizon/VP | B Six edges | C Faces | D Setup | Total/12 |
|---|---|---|---|---|
| 3 | 3 | 1 | 3 | 10 / 12 |

## Answer

A = 3, B = 3, C = 1, D = 3. Total = 10 of 12.

## Reasoning

Horizon, vanishing point, depth edges, and consistency are correct, but slanted front faces are a major error on C, so C is scored 1.

## Check

Compare each front face to a true rectangle; the slant confirms the C deduction while depth edges still meet the vanishing point.

# One-Point Perspective Rubric



## Original prompt

Task 4 — Score a drawing with a correct horizon and vanishing point, correct front faces, and consistent forms, but where two of six depth edges miss the vanishing point.

Score A horizon/VP, B six receding edges, C two front faces, and D setup consistency; each is 0–3.

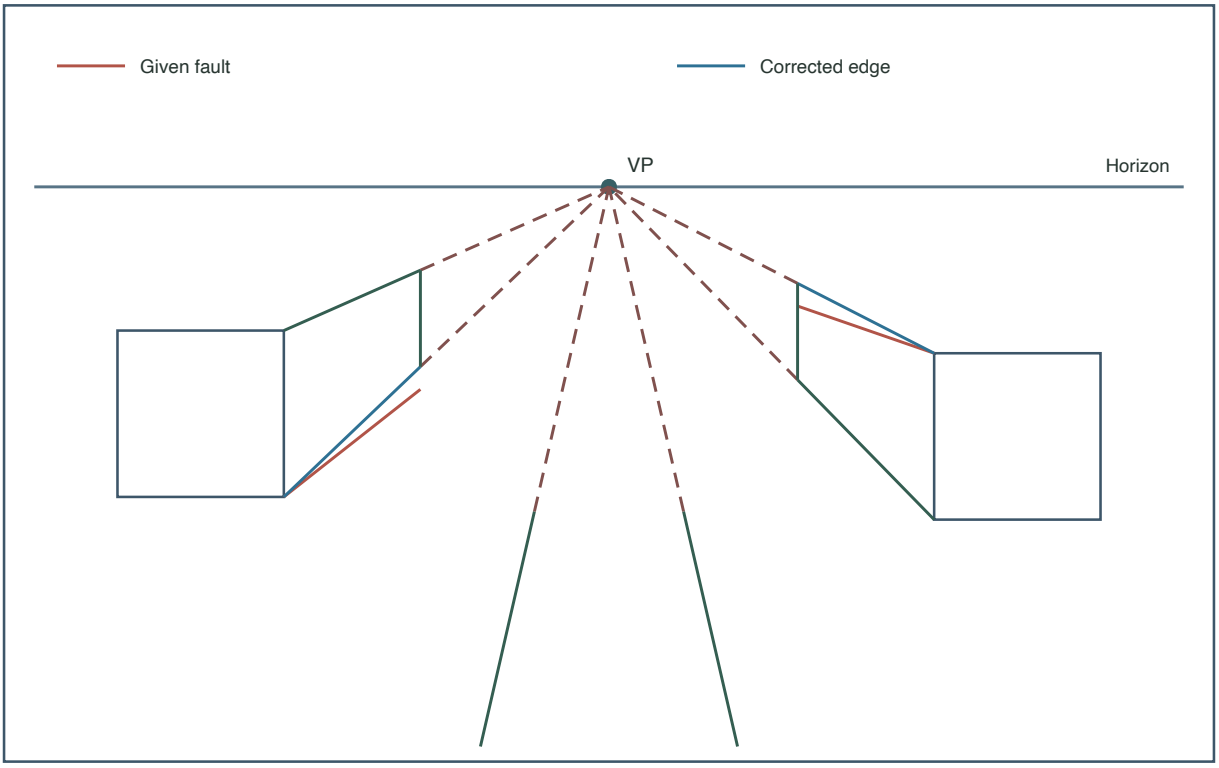


Score each criterion from 0 to 3. The total is out of 12.

| A Horizon/VP | B Six edges | C Faces | D Setup | Total/12 |
|---|---|---|---|---|
| 3 | 2 | 3 | 3 | 11 / 12 |

## Answer

A = 3, B = 2, C = 3, D = 3. Total = 11 of 12. The most useful correction is to redraw the two misaligned depth edges so they aim at the marked vanishing point.

## Reasoning

Only B is reduced because two depth edges miss; the other criteria are fully met. Correcting those two edges raises B to 3.

## Check

Trace all six depth edges toward the vanishing point; exactly two miss, confirming the single B deduction.