One-Point Perspective Rubric

Student | Task 1 of 4 | A4

Original prompt

Task 1 — Score a drawing with one horizon line, one marked vanishing point, all depth edges converging correctly, square front faces, and all forms sharing the same vanishing point.

Score A horizon/VP, B six receding edges, C two front faces, and D setup consistency; each is 0–3.

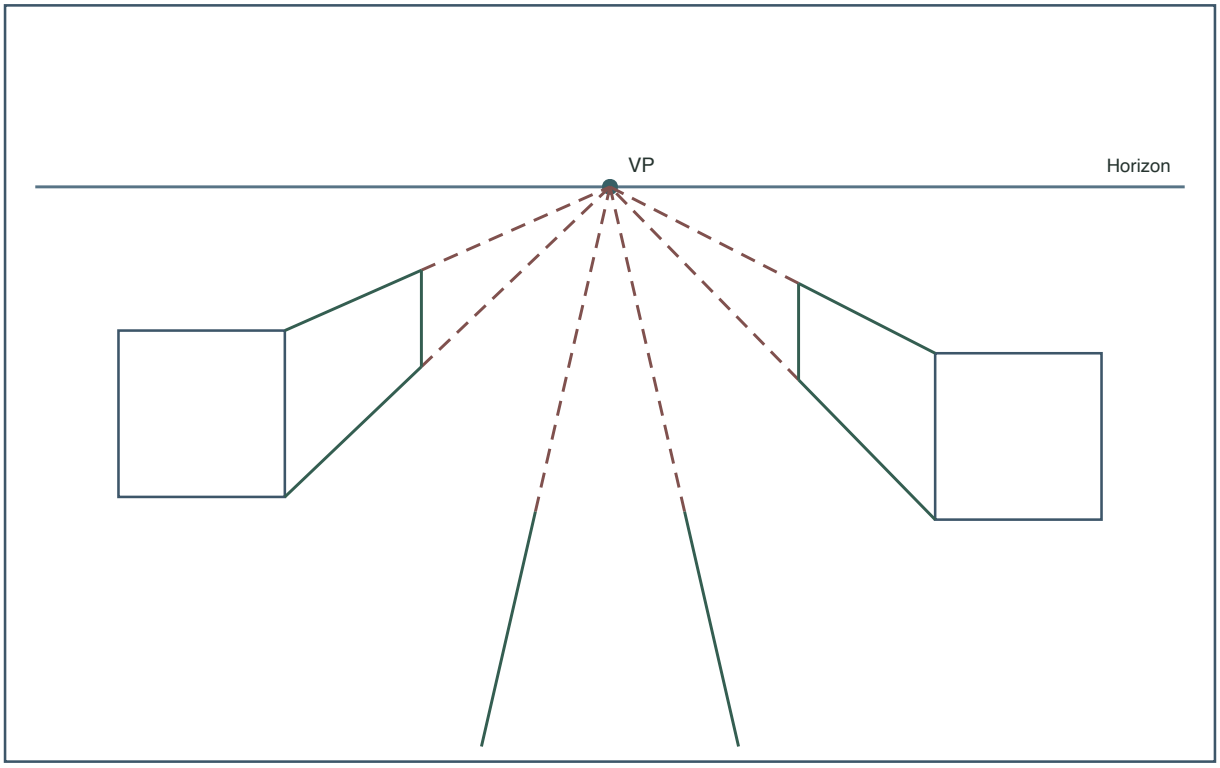

Score each criterion from 0 to 3. The total is out of 12.

A Horizon/VP	B Six edges	C Faces	D Setup	Total/12

Reasoning and evidence

One-Point Perspective Rubric

Student | Task 2 of 4 | A4

Original prompt

Task 2 — Score a two-building street drawing split evenly between two one-point setups. Each building has its own level horizon and marked vanishing point. In each building, all three shown depth edges meet its own point and its front face is square. Give each criterion a score, a reason, and the total, and name the criterion most affected by the split horizon.

Score A horizon/VP, B six receding edges, C two front faces, and D setup consistency; each is 0–3.

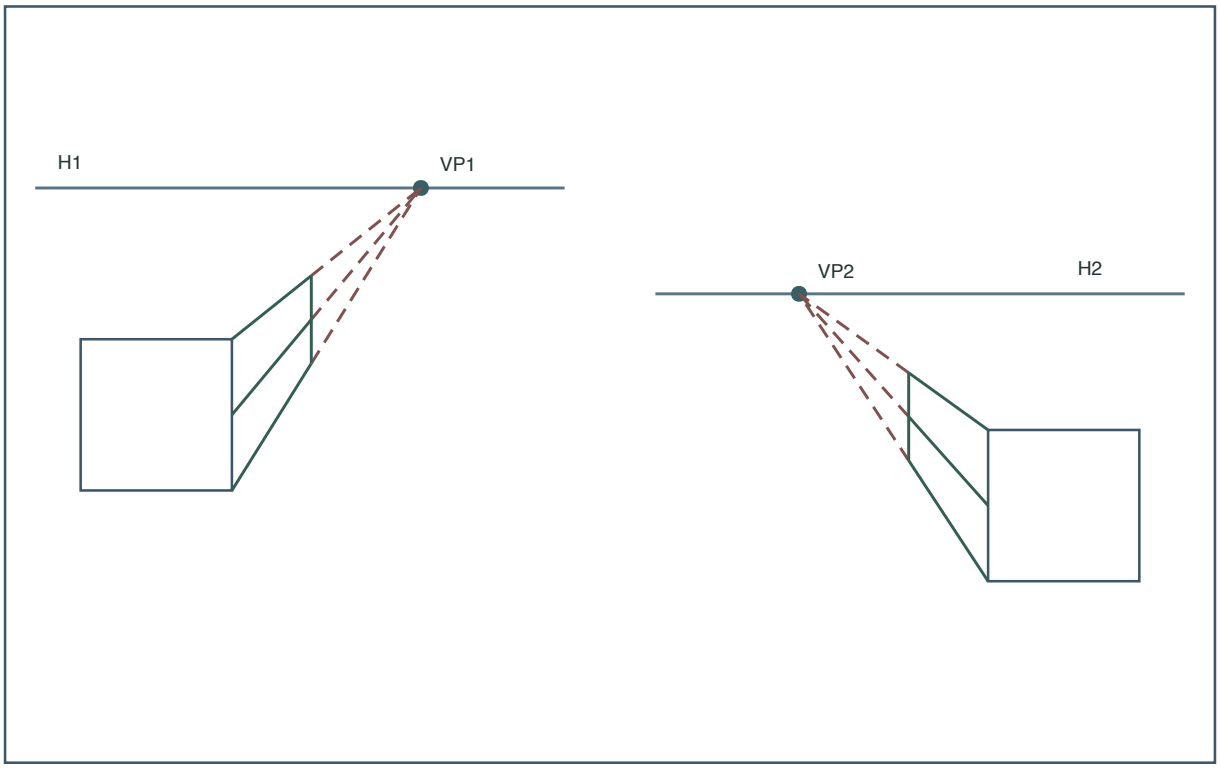

Score each criterion from 0 to 3. The total is out of 12.

A Horizon/VP	B Six edges	C Faces	D Setup	Total/12

Reasoning and evidence

One-Point Perspective Rubric

Student | Task 3 of 4 | A4

Original prompt

Task 3 — Score a drawing where the horizon and vanishing point are correct and all depth edges converge, but the front faces are drawn as slanted parallelograms instead of squares.

Score A horizon/VP, B six receding edges, C two front faces, and D setup consistency; each is 0–3.

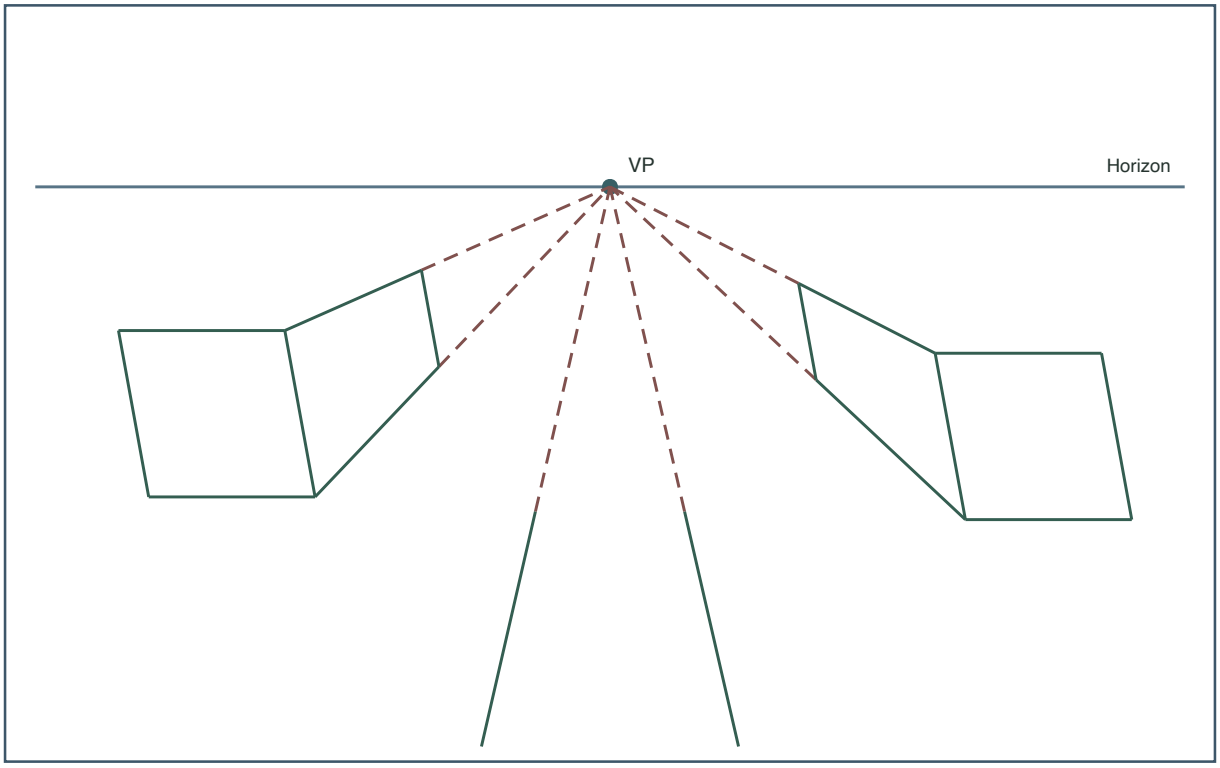

Score each criterion from 0 to 3. The total is out of 12.

A Horizon/VP	B Six edges	C Faces	D Setup	Total/12

Reasoning and evidence

One-Point Perspective Rubric

Student | Task 4 of 4 | A4

Original prompt

Task 4 — Score a drawing with a correct horizon and vanishing point, correct front faces, and consistent forms, but where two of six depth edges miss the vanishing point.

Score A horizon/VP, B six receding edges, C two front faces, and D setup consistency; each is 0–3.

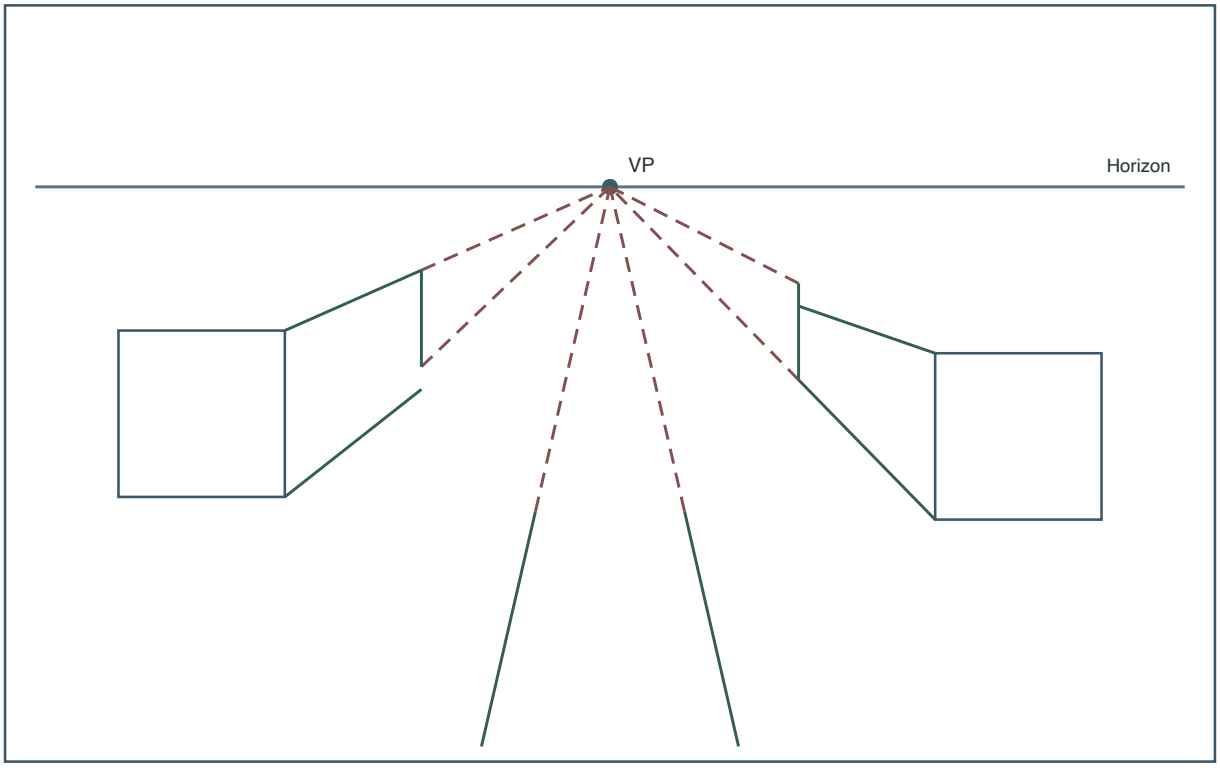

Score each criterion from 0 to 3. The total is out of 12.

A Horizon/VP	B Six edges	C Faces	D Setup	Total/12

Reasoning and evidence