# Draw Isometric Screw

Student | Task 1 of 4 | A4

## Original prompt

Task 1 — Head only. Using the isometric axes, construct a hexagonal screw head centred on a vertical axis. Draw the top hexagon, the vertical side lines, and the lower hexagon. Do not draw the shank or thread.

## Practice construction

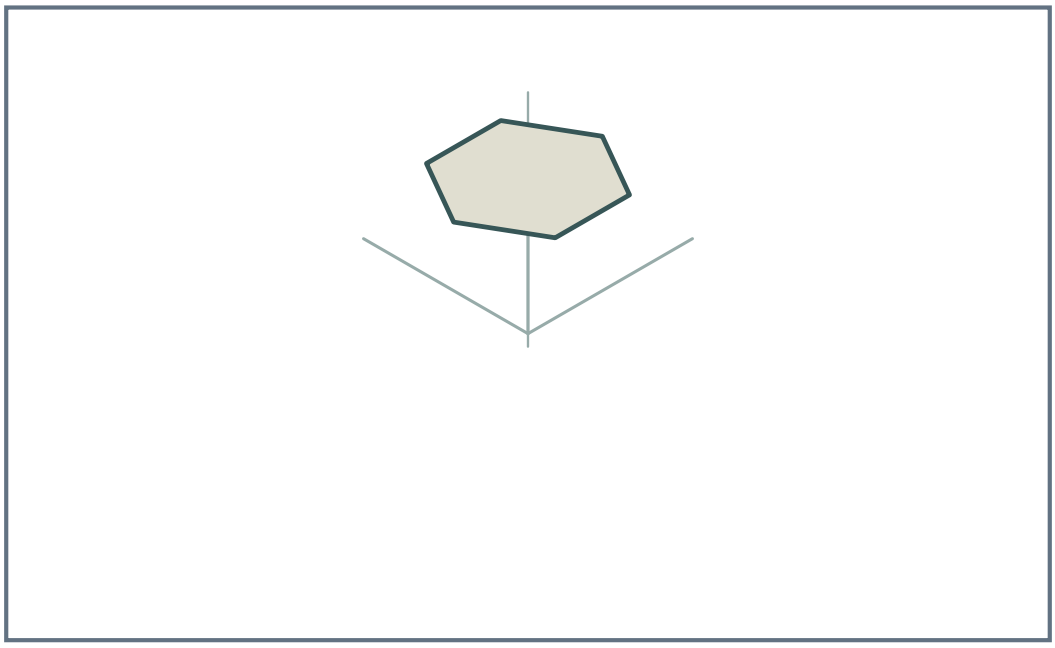

## Your drawing and projection check

# Draw Isometric Screw

Student | Task 2 of 4 | A4

## Original prompt

Task 2 — Shank only. Below the given head underside in the reference figure, construct a cylindrical shank along the vertical axis, ending in a chamfered tip. Draw the two vertical side lines, the upper ellipse at the head underside, the lower ellipse at the tip, and the chamfer ring.

## Practice construction

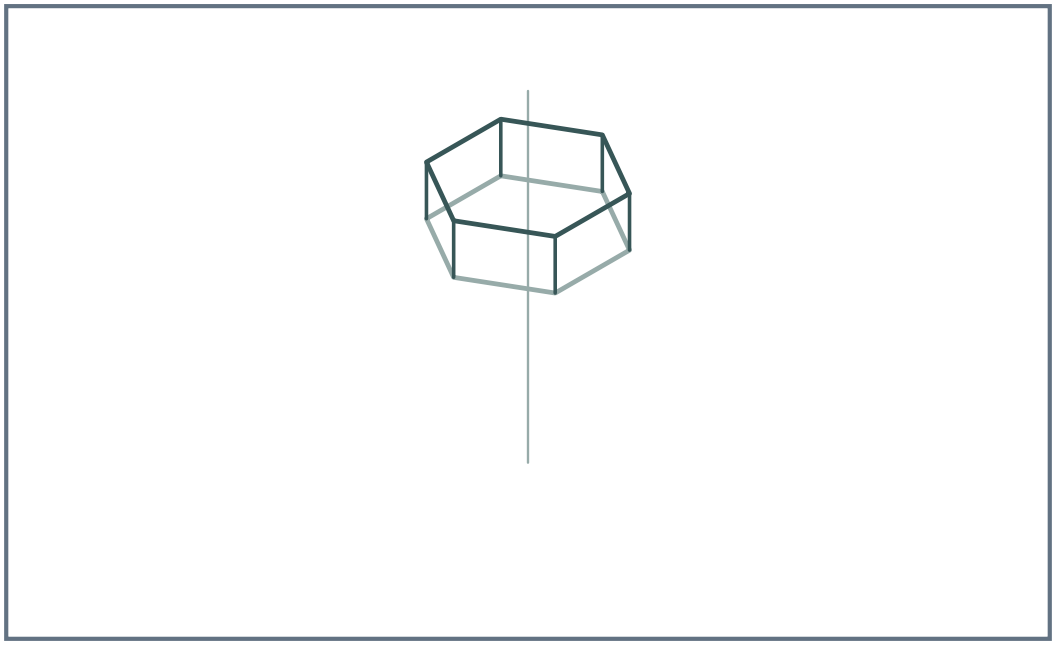

## Your drawing and projection check

# Draw Isometric Screw

Student | Task 3 of 4 | A4

## Original prompt

Task 3 — Thread only. On the given shank in the reference figure, add a front-facing helical thread as a zig-zag series of evenly spaced slanted lines that alternate direction and stay within the shank's side lines.

## Practice construction

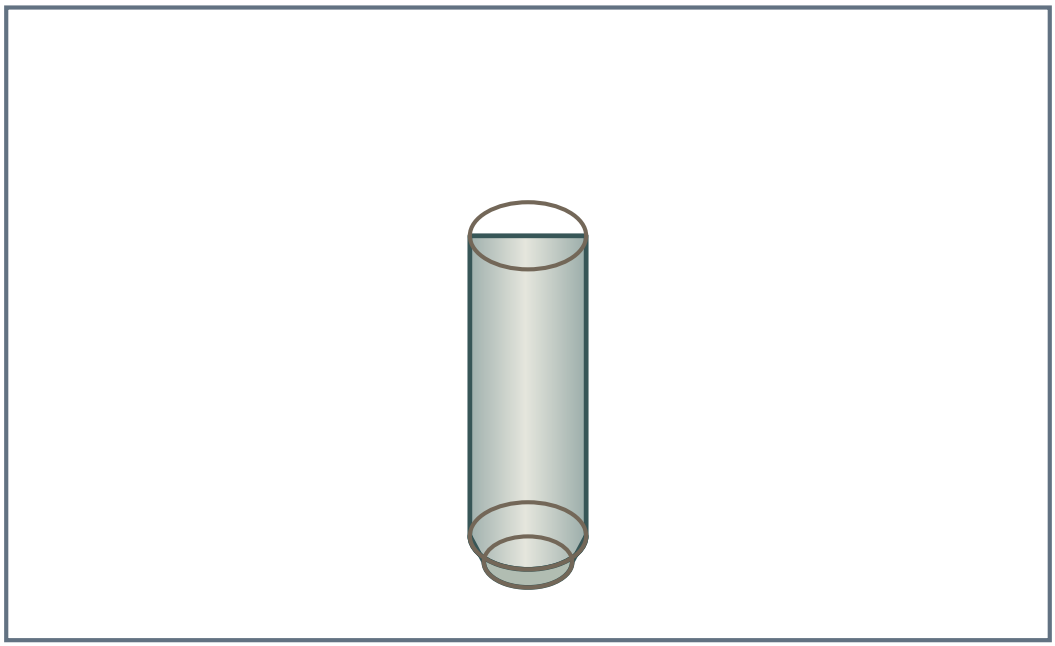

## Your drawing and projection check

# Draw Isometric Screw

Student | Task 4 of 4 | A4

## Original prompt

Task 4 — Full screw from a reference. Using the supplied reference image of an isometric screw, redraw the complete screw: hexagonal head, cylindrical shank, chamfered tip, and front-facing helical thread. Match the reference's proportions and thread spacing as closely as you can.

## Practice construction

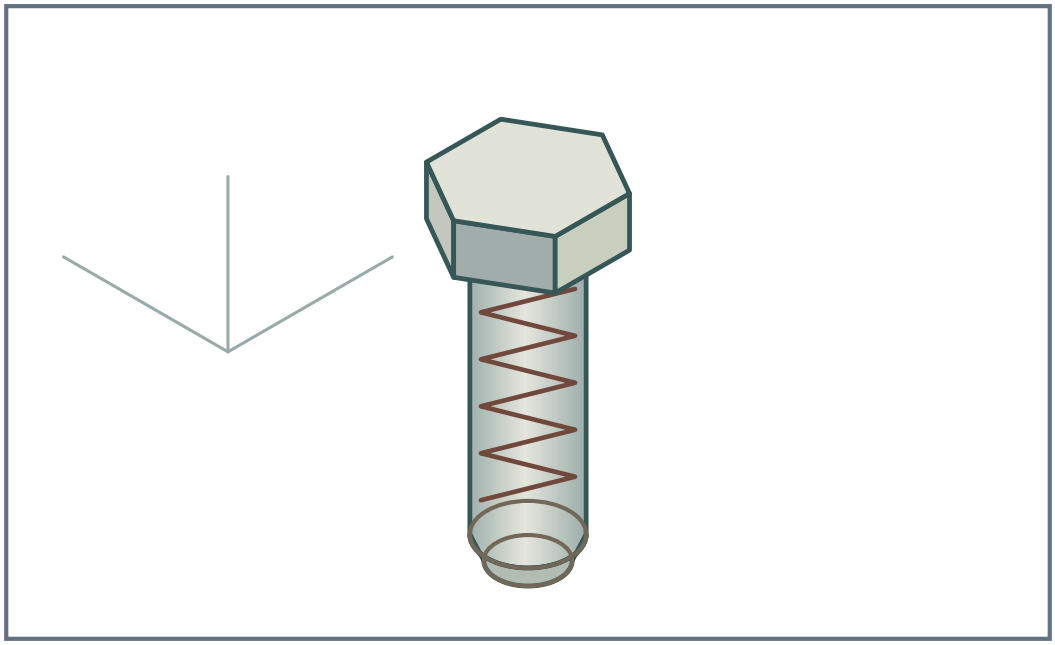

## Your drawing and projection check