Draw Isometric Screw

Answer | Task 1 of 4 | A4

Original prompt

Task 1 — Head only. Using the isometric axes, construct a hexagonal screw head centred on a vertical axis. Draw the top hexagon, the vertical side lines, and the lower hexagon. Do not draw the shank or thread.

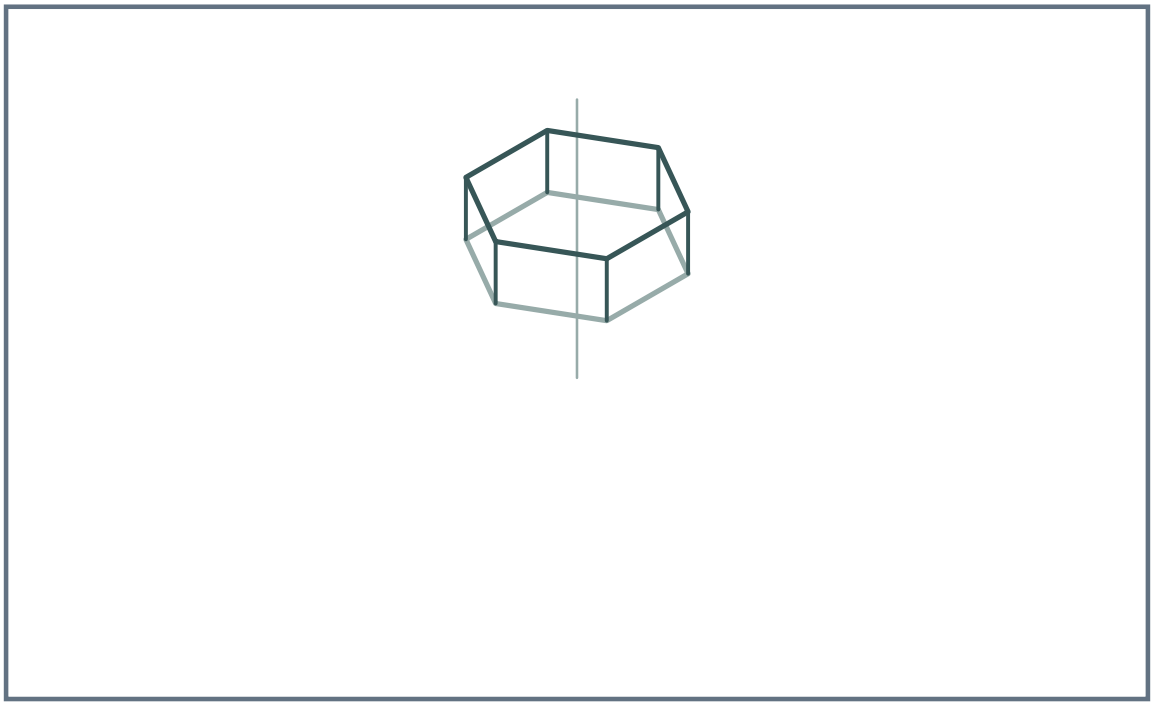

Answer

A correct drawing shows a hexagon on the isometric top plane, vertical lines down from each corner to a second hexagon of the same size, and the whole head centred on the vertical axis. The head is a hexagonal prism seen isometrically.

Reasoning

The head is a hexagonal prism; its top and bottom faces are hexagons on parallel isometric planes, and its sides are vertical. Centring on the vertical axis keeps the head aligned with the screw's long axis.

Check

Check that the top and bottom hexagons are the same size, that all six side lines are vertical and parallel, and that the head is centred on the vertical axis.

Draw Isometric Screw

Original prompt

Task 2 — Shank only. Below the given head underside in the reference figure, construct a cylindrical shank along the vertical axis, ending in a chamfered tip. Draw the two vertical side lines, the upper ellipse at the head underside, the lower ellipse at the tip, and the chamfer ring.

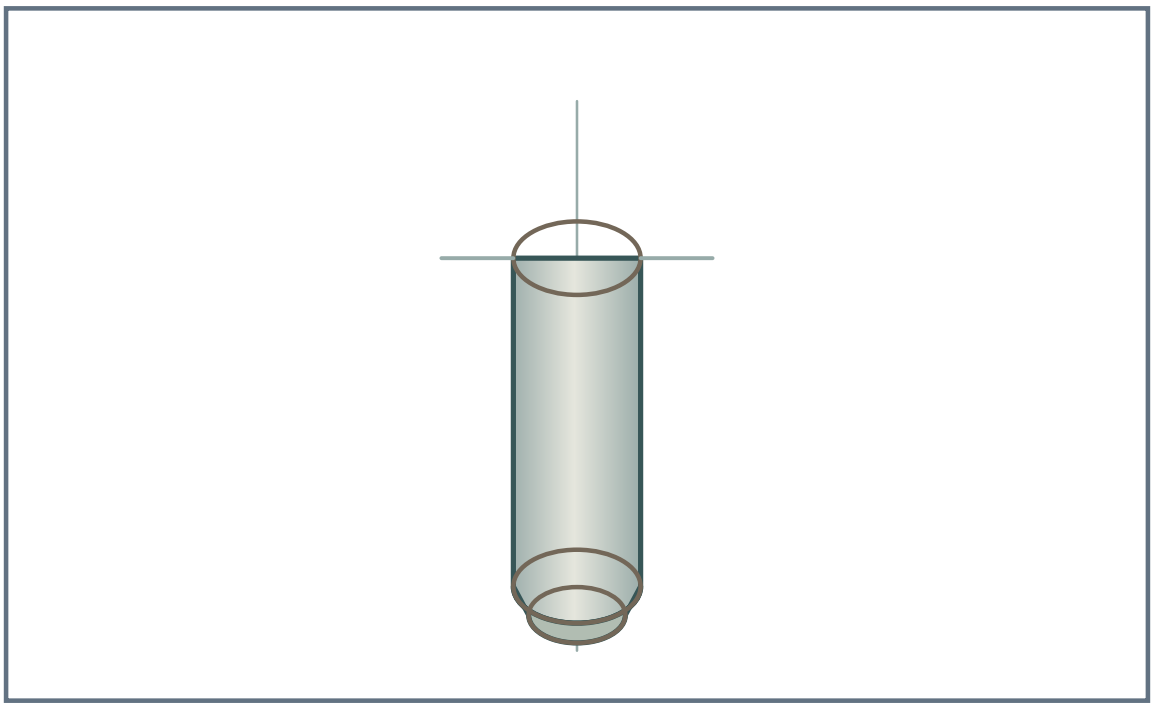

Answer

A correct drawing shows two vertical side lines joined by an upper ellipse at the head underside and a lower ellipse at the tip, with a short chamfer ring of lines around the tip. The shank is narrower than the head and centred on the vertical axis.

Reasoning

A cylinder in isometric is drawn as two vertical side lines plus ellipses for the circular cross-sections. The chamfer is shown by a smaller ellipse and a short taper ring, which reads as a bevelled tip.

Check

Check that the side lines are vertical and parallel, that the upper and lower ellipses are centred on the axis, and that the chamfer ring sits at the tip without extending beyond the shank's width.

Draw Isometric Screw

Answer | Task 3 of 4 | A4

Original prompt

Task 3 — Thread only. On the given shank in the reference figure, add a front-facing helical thread as a zig-zag series of evenly spaced slanted lines that alternate direction and stay within the shank's side lines.

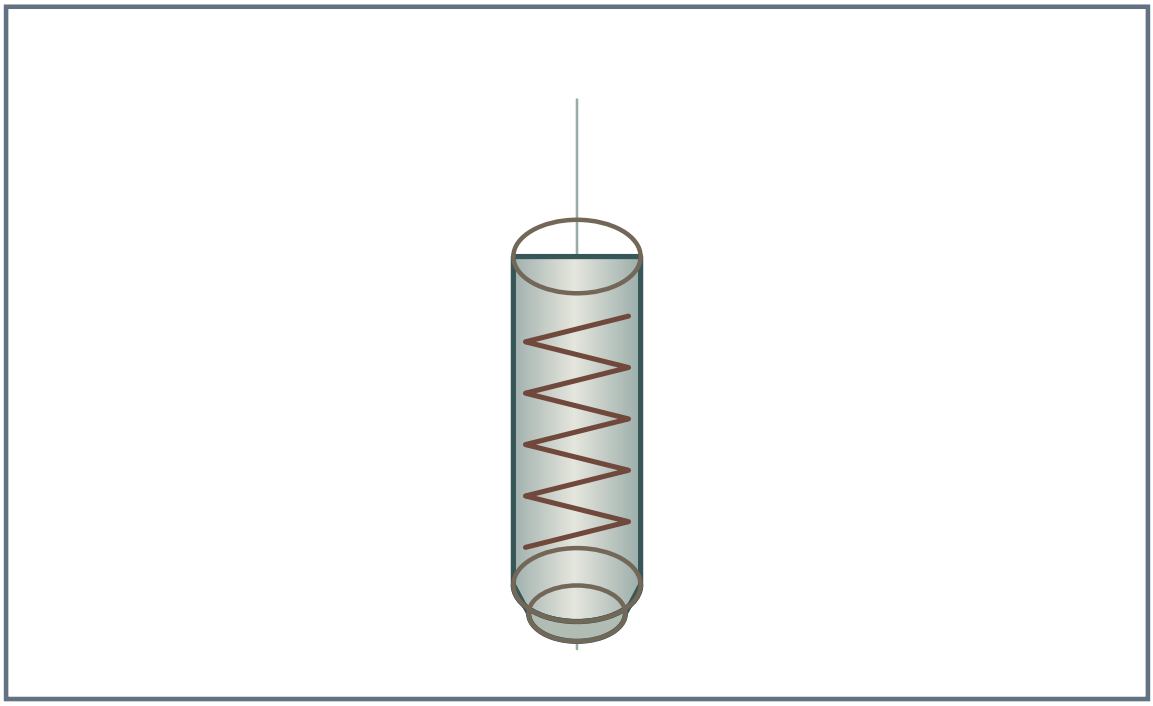

Answer

A correct drawing shows a series of evenly spaced slanted lines across the front of the shank, each starting where the previous one ended, alternating direction to form a zig-zag helix. The lines stay within the shank's side lines and read as a thread winding around the cylinder.

Reasoning

The alternating strokes provide a schematic front view of the thread. Even vertical spacing gives a regular rhythm, and keeping the endpoints inside the silhouette makes the mark read on the shank.

Check

Check that the thread lines are evenly spaced, alternate direction, connect end-to-end, and do not cross the shank's side lines.

Draw Isometric Screw

Original prompt

Task 4 — Full screw from a reference. Using the supplied reference image of an isometric screw, redraw the complete screw: hexagonal head, cylindrical shank, chamfered tip, and front-facing helical thread. Match the reference's proportions and thread spacing as closely as you can.

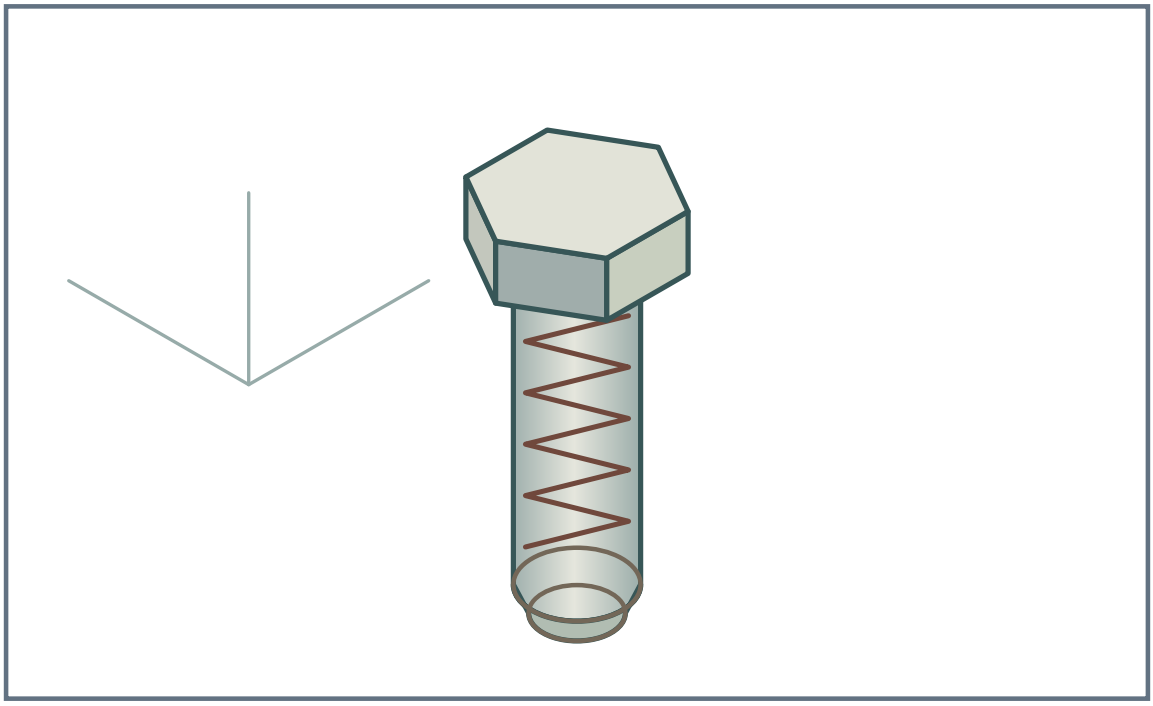

Answer

A correct redrawing shows the same three parts in the same order and alignment as the reference: a hexagonal head wider than the shank, a cylindrical shank with upper and lower ellipses and a chamfer ring, and a front-facing zig-zag thread with even spacing. Proportions and thread spacing should visually match the reference.

Reasoning

Redrawing from a reference trains observation of proportions and alignment. The construction order is the same as the worked example: head, then shank, then thread, all on the same vertical axis.

Check

Compare your drawing to the reference: check head width relative to shank, shank length, thread spacing, and that all parts share the same vertical axis.