Draw Isometric Screw

Reference I Construction reference I A4

Axes and hexagonal head

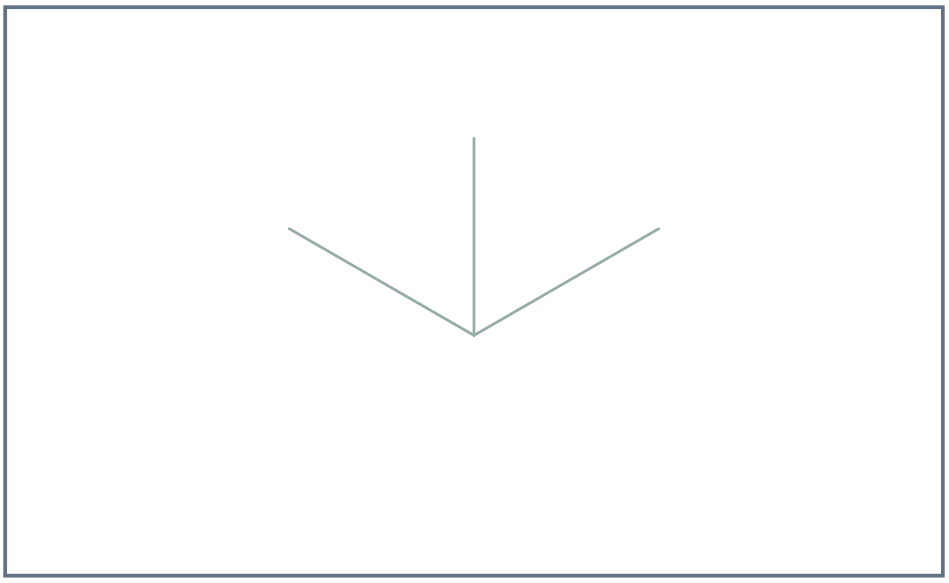

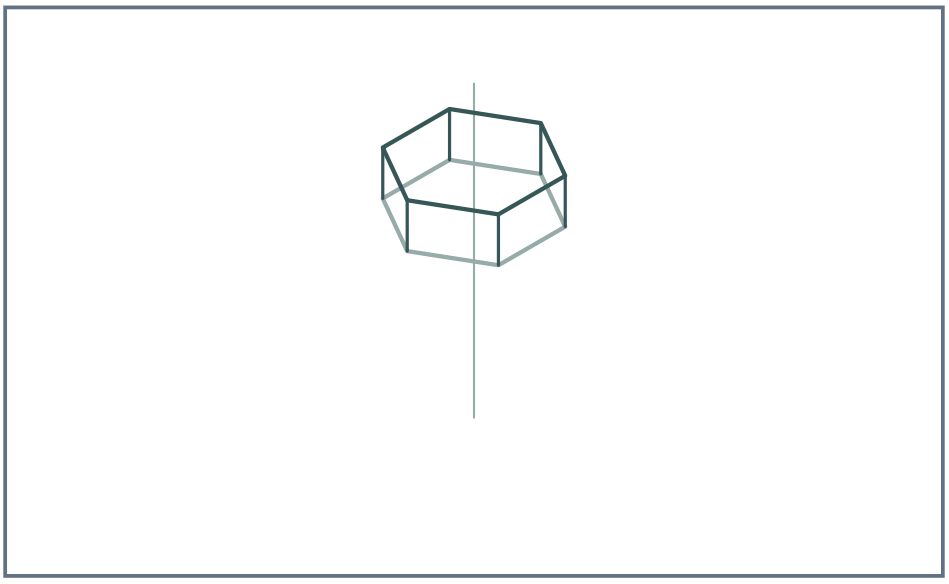

Draw Isometric Screw

Reference I Construction reference I A4

Cylindrical shank and the thread study

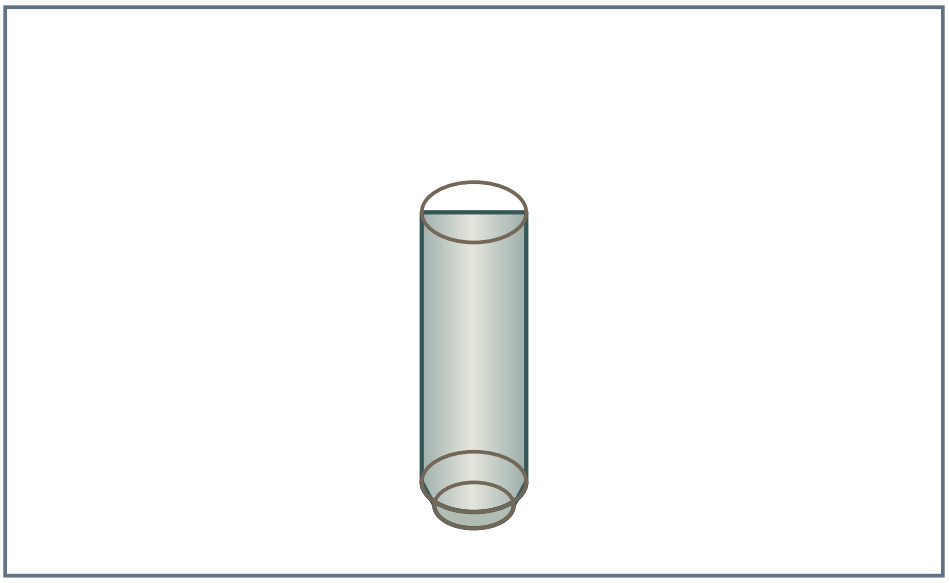

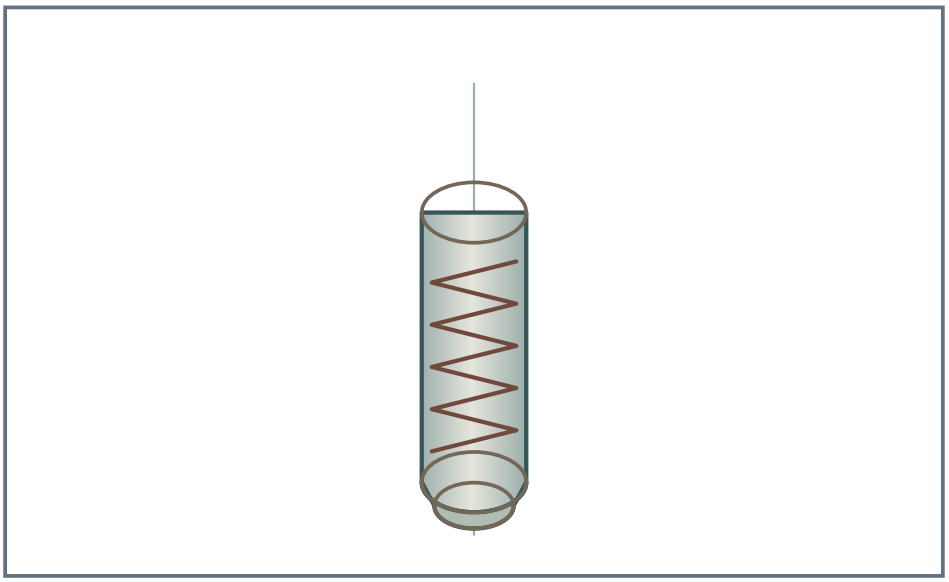

Draw Isometric Screw

Reference I Worked example I A4

Original prompt

Construct a complete isometric screw: hexagonal head, cylindrical shank, chamfered tip, and a front-facing helical thread. Use the isometric axes and keep the thread spacing even.

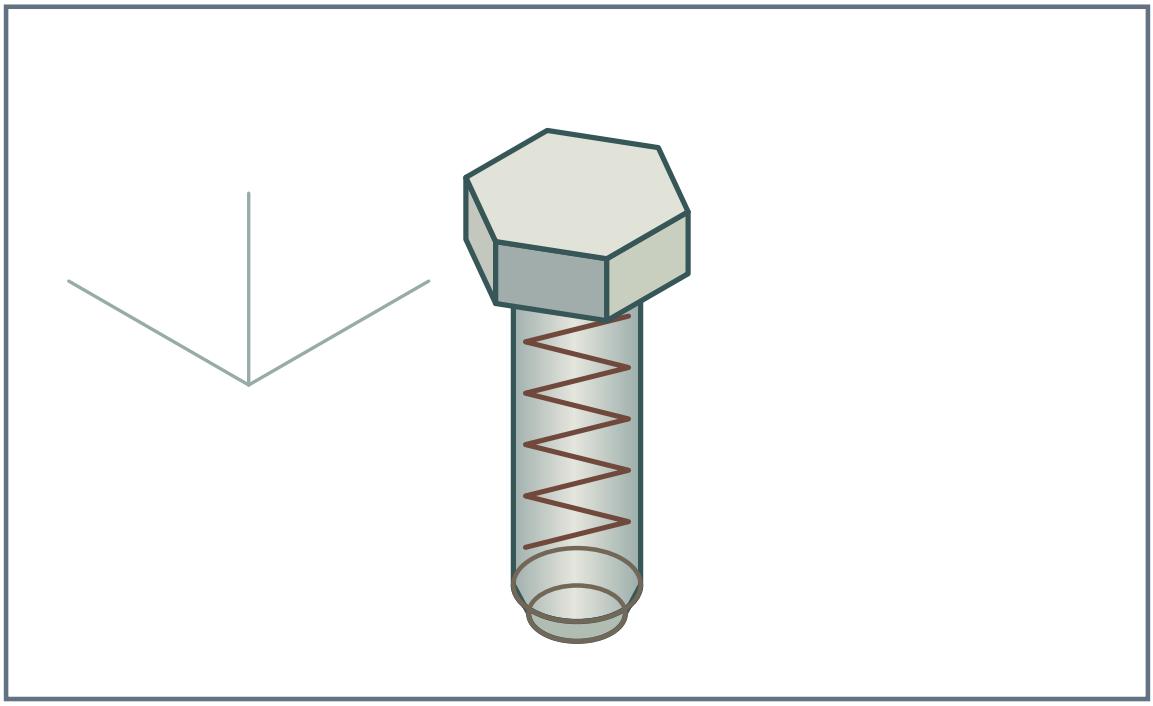

Answer

A correct drawing shows: (1) a vertical screw axis with two 30° isometric axes; (2) a hexagonal head drawn as two hexagons joined by vertical side lines, centred on the axis and wider than the shank; (3) a cylindrical shank drawn as two vertical side lines joined by an upper ellipse at the head underside and a lower ellipse at the tip; (4) a short chamfer ring of lines around the tip; (5) a series of evenly spaced slanted lines across the front of the shank, alternating direction, forming a zig-zag helix that reads as a thread. The head, shank, and thread are all aligned on the same vertical axis, and the thread lines stay within the shank's side lines.

Reasoning

The head is built first because it fixes the top of the screw and the width reference. The shank is built from the head underside down the vertical axis, using ellipses for the circular cross-sections. The thread is added last because it must follow the shank's surface; drawing it after the shank ensures the thread lines stay within the shank's side lines and read as winding around the cylinder.

Check

Check that the head is wider than the shank, that the shank's side lines are vertical and parallel, that the upper and lower ellipses are centred on the axis, and that the thread lines are evenly spaced and alternate direction without crossing the shank's side lines.