Draw Isometric Bridge

Reference | Axes, deck and piers | A4

Build the axes first, then set the span. Fit the piers beneath the deck.

Axes

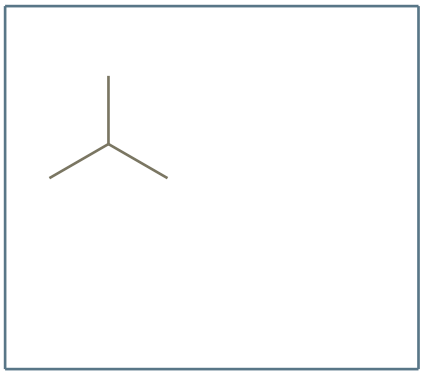

Deck

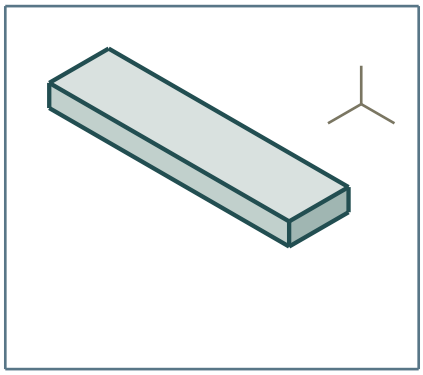

Piers

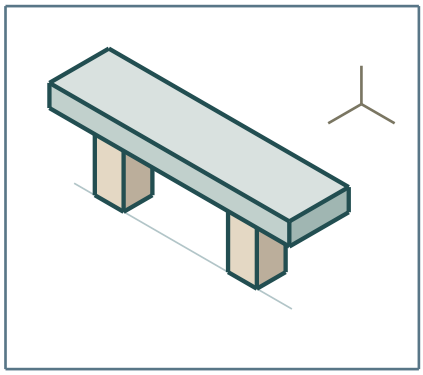

Draw Isometric Bridge

Reference I Worked example I A4

Original prompt

Worked example: draw a short isometric bridge plate with a deck box and two piers.

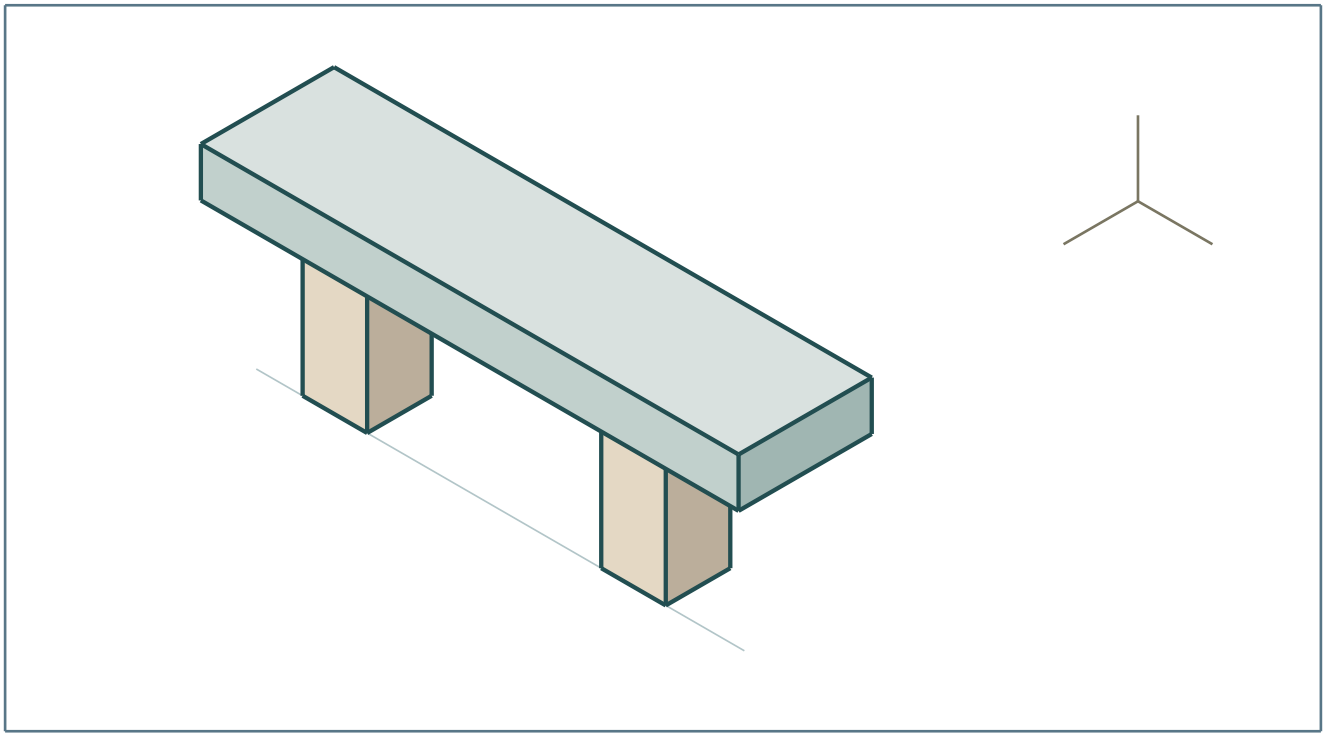

Answer

Set an origin with a vertical axis and two slanted axes. Draw the deck as a long box: span along one slanted axis, width along the other, thickness up the vertical. Mark two pier positions along the span, draw each pier as a vertical box from the ground line to the deck underside, and check that all edges follow an axis and each pier top meets the deck.

Reasoning

The deck is built first because the piers depend on its underside position; building the deck as one box keeps opposite edges parallel, and placing piers on the span axis keeps them under the deck.

Check

Trace each edge to an axis direction and confirm each pier top touches the deck underside with no gap.