Draw Isometric Bridge

Student | Task 1 of 4 | A4

Original prompt

Task 1: Draw the isometric axes and a single deck box with no piers.

Your drawing and corrections

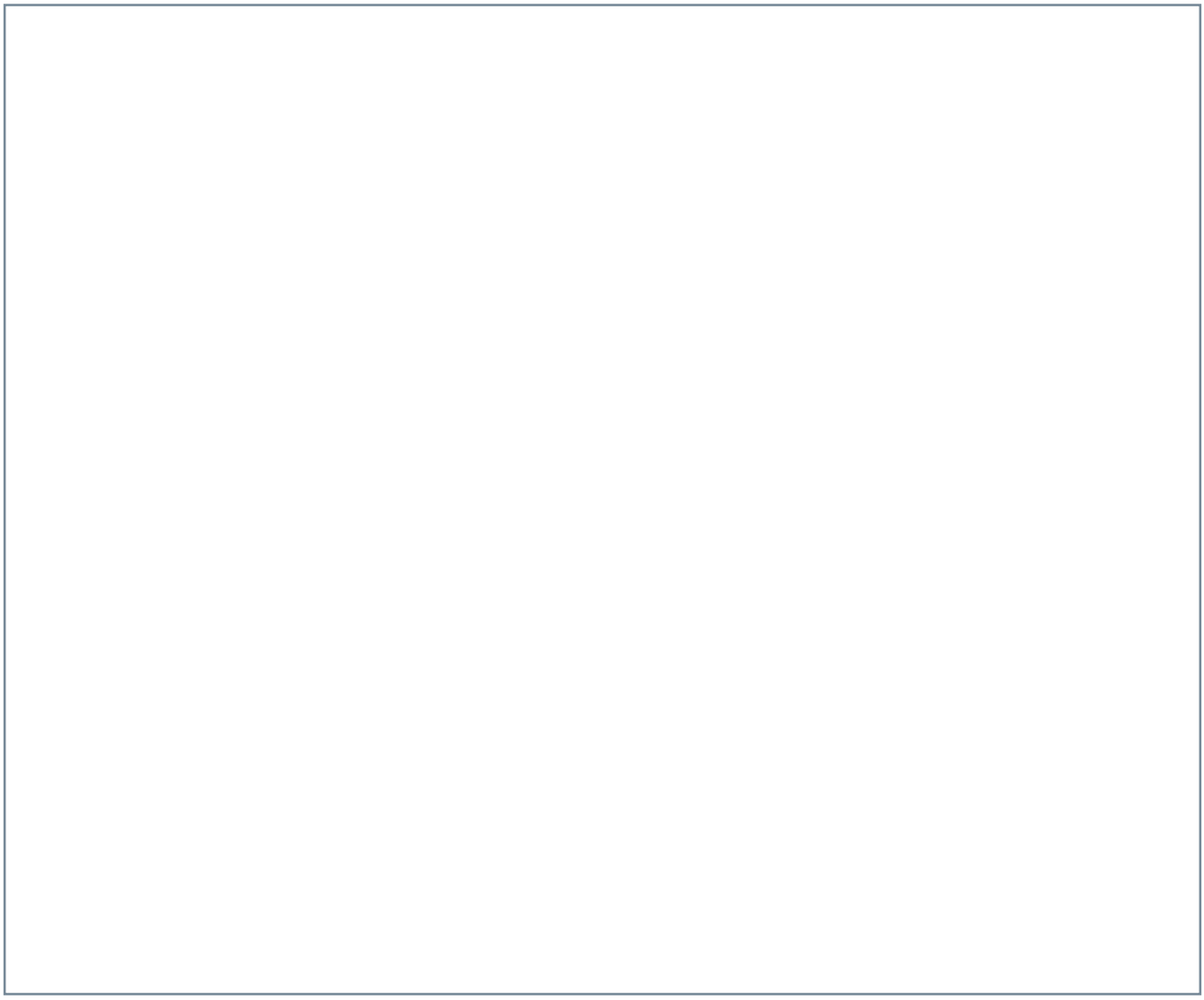

Draw Isometric Bridge

Student | Task 2 of 4 | A4

Original prompt

Task 2: Add two piers beneath the deck from Task 1.

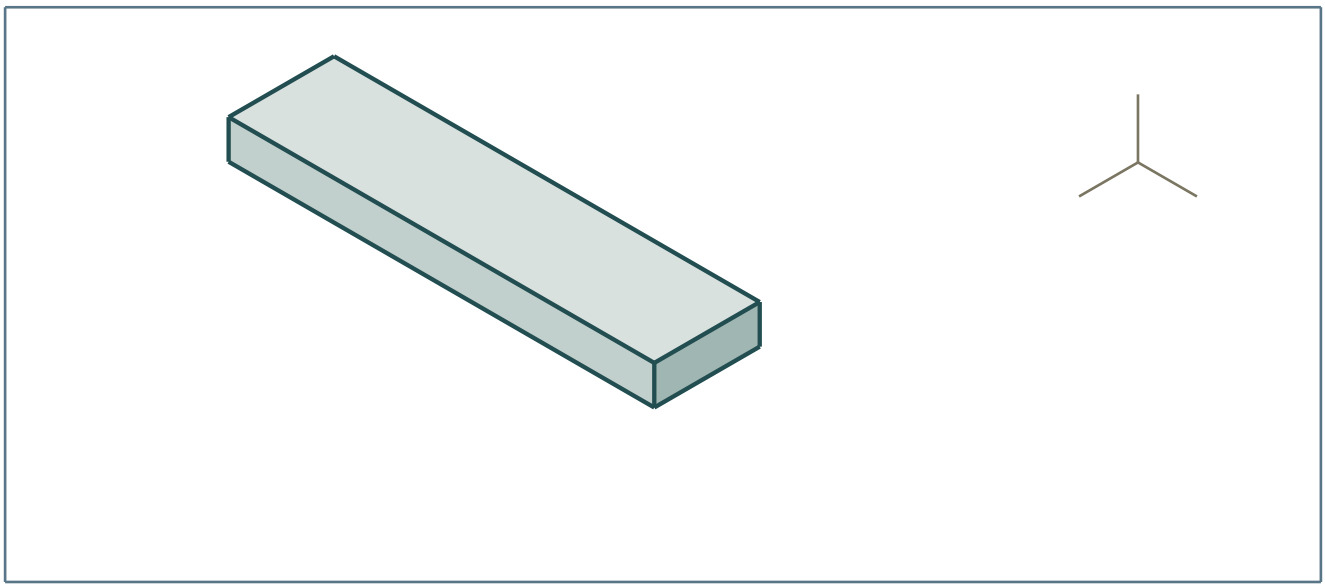

Your drawing and corrections

Draw Isometric Bridge

Student | Task 3 of 4 | A4

Original prompt

Task 3: Redraw the plate with a wider deck and one central pier.

Your drawing and corrections

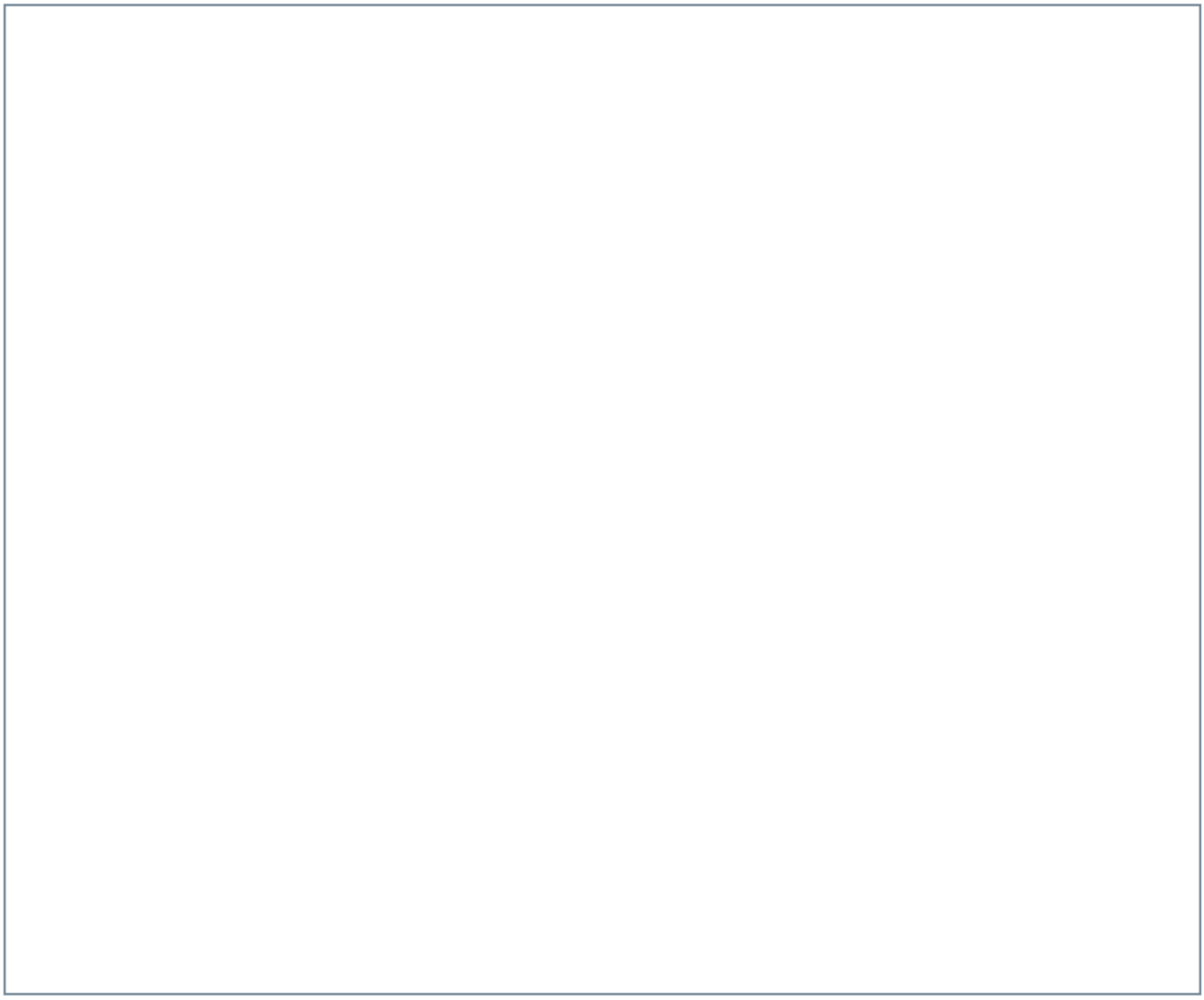

Draw Isometric Bridge

Student | Task 4 of 4 | A4

Original prompt

Task 4: Check a given plate where one pier edge slants off-axis and one pier floats below the deck; describe the corrections.

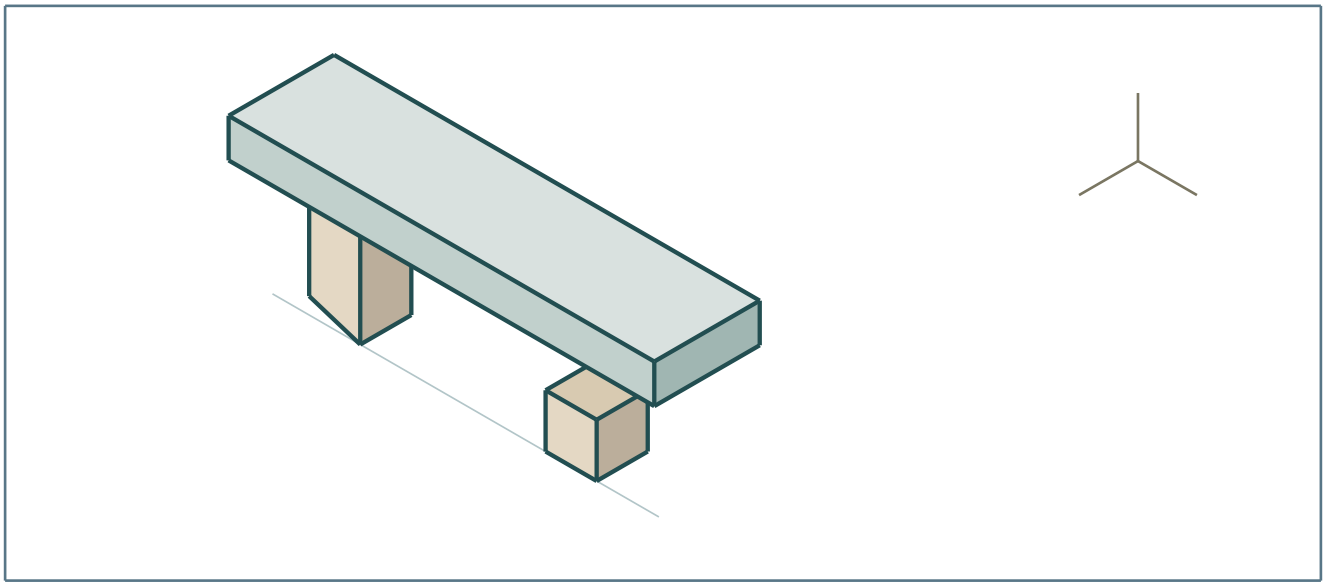

Your drawing and corrections