# Draw Isometric Bridge

Answer | Task 1 of 4 | LETTER

## Original prompt

Task 1: Draw the isometric axes and a single deck box with no piers.

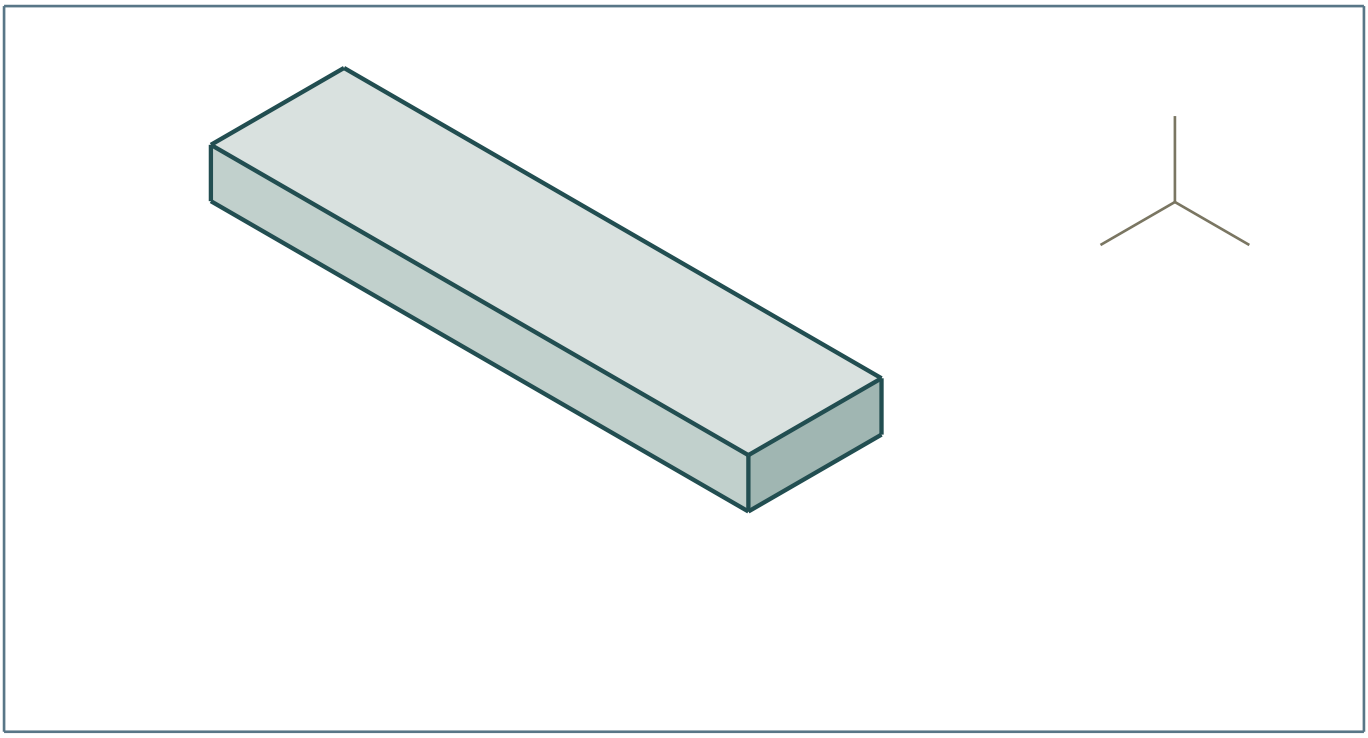

## Answer

A vertical axis and two slanted axes from one origin; a long box with span along one slanted axis, width along the other, and thickness up the vertical, with all opposite edges parallel.

## Reasoning

The deck box is the base of the plate, so it must be built on the axes before piers are added.

## Check

Confirm every edge is parallel to one axis and the top face is a parallelogram.

# Draw Isometric Bridge



## Original prompt

Task 2: Add two piers beneath the deck from Task 1.

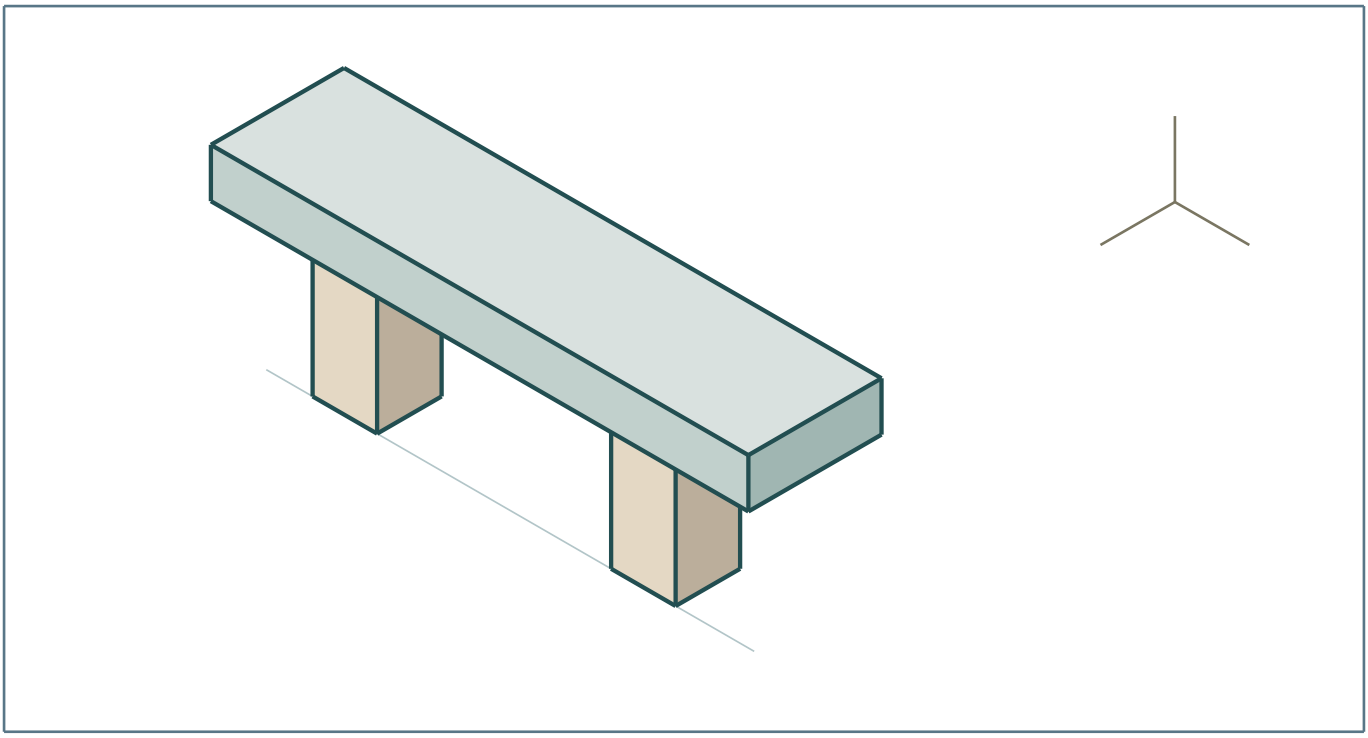

## Answer

Two vertical boxes under the deck, each with top and bottom faces on the slanted axes, tops meeting the deck underside and bases on a ground line along the span axis.

## Reasoning

Piers are vertical boxes placed on the span axis so they support the deck from below.

## Check

Check each pier top touches the deck underside and each pier side stays vertical.

# Draw Isometric Bridge



## Original prompt

Task 3: Redraw the plate with a wider deck and one central pier.

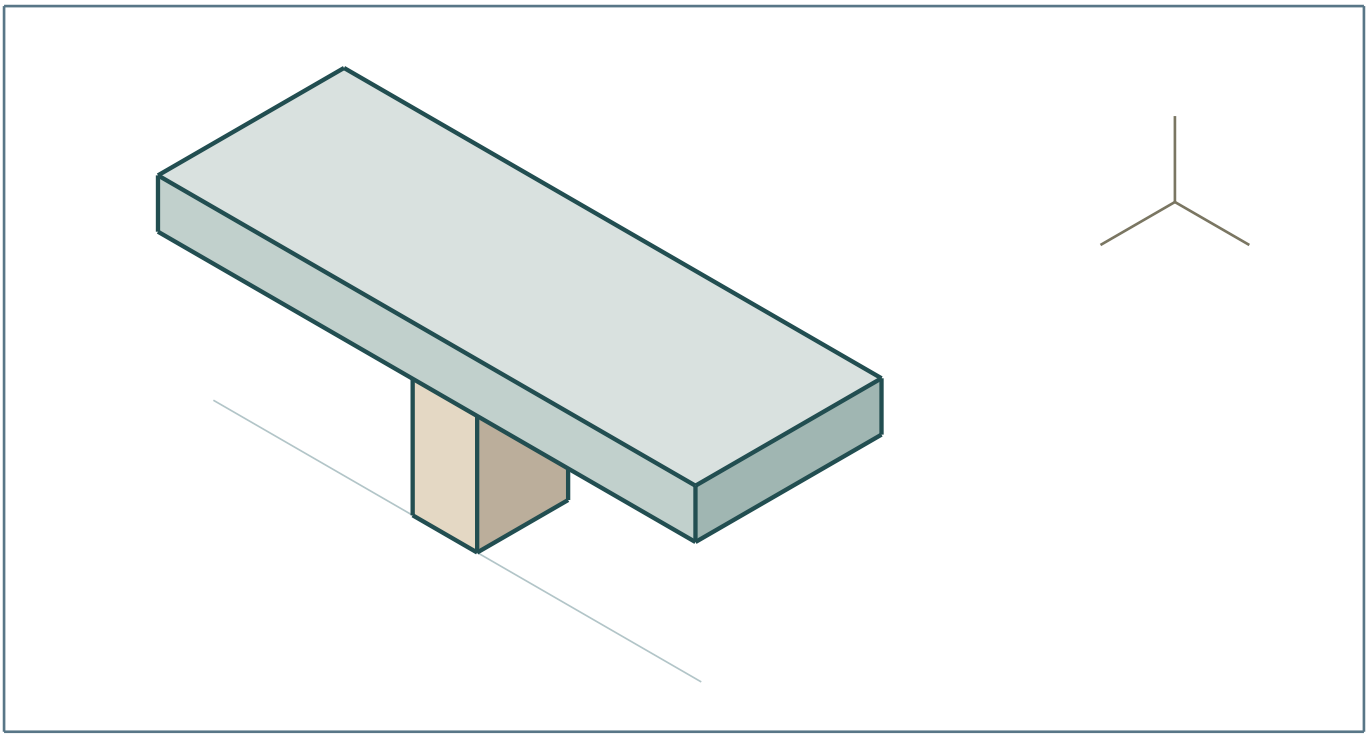

## Answer

A deck box with greater width along the width axis and one vertical pier centered under the span, with all edges on the axes and the pier top meeting the deck underside.

## Reasoning

Changing width only changes the width-axis length; the construction method and axis directions stay the same.

## Check

Confirm the wider deck still has parallel opposite edges and the central pier is under the deck.

# Draw Isometric Bridge

Answer | Task 4 of 4 | LETTER

## Original prompt

Task 4: Check a given plate where one pier edge slants off-axis and one pier floats below the deck; describe the corrections.

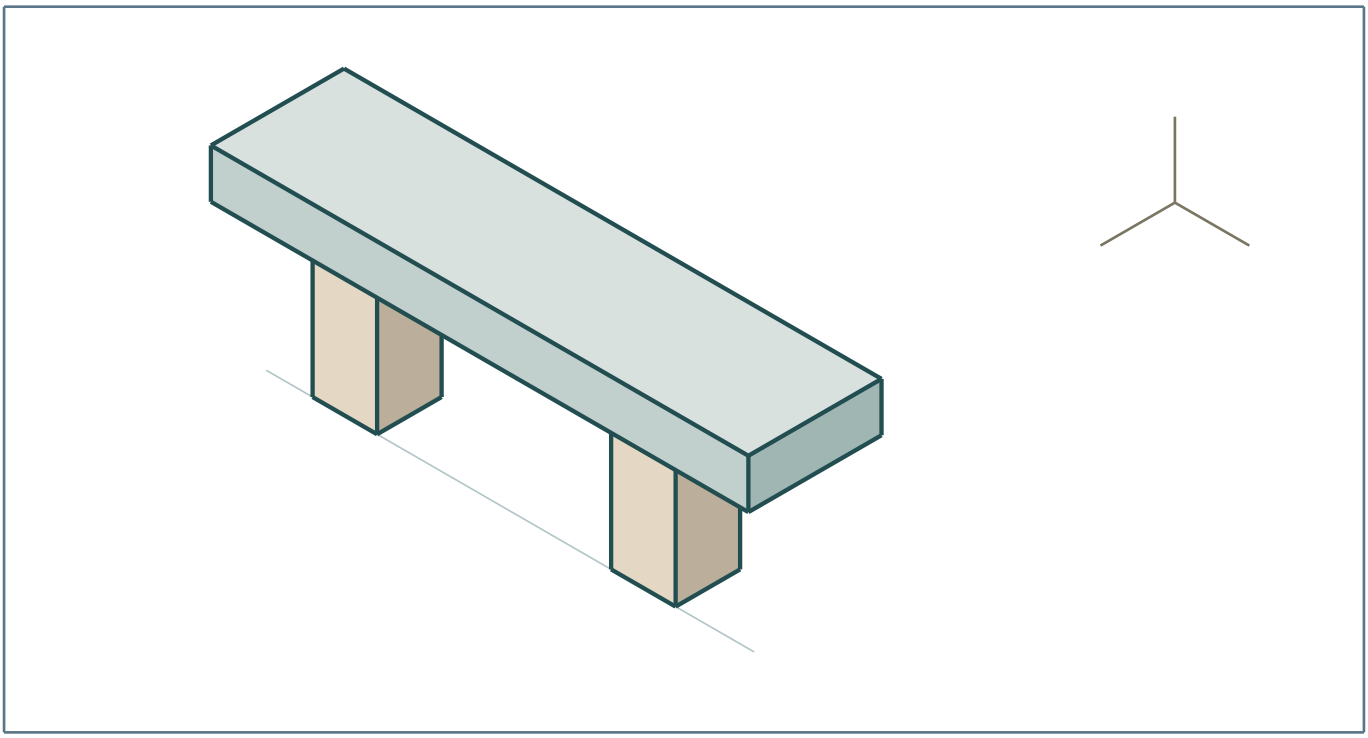

## Answer

On the left pier, redraw the lower span edge parallel to the deck's long edge so its base corner returns to the ground guide. On the right pier, keep the base in place and extend the vertical sides to meet the underside of the deck. Then check both supports and all three directions.

## Reasoning

An off-axis edge breaks isometric construction, and a floating pier breaks the support relationship with the deck.

## Check

Compare the lower edge of the left pier with the span axis. Both pier tops should touch the deck underside and both bases should remain at the ground guide.