Draw a Christmas Scene in Two-Point Perspective

Student | Task 1 of 4 | A4

Original prompt

Task 1: Draw only the horizon, two vanishing points, and a single corner building as a box seen from a corner. No tree or gifts yet.

Build your next stage here

Draw a Christmas Scene in Two-Point Perspective

Student | Task 2 of 4 | A4

Original prompt

Task 2: Add a street edge and a curb to the Task 1 corner, running in both receding directions.

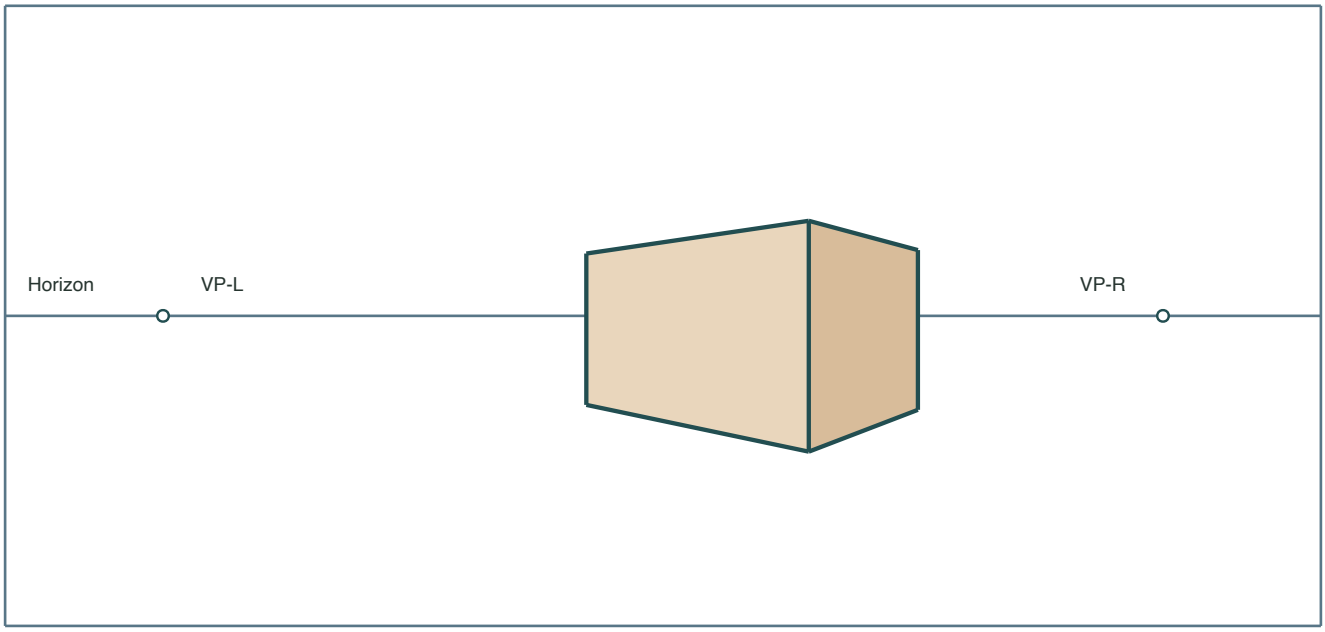

Build your next stage here

Draw a Christmas Scene in Two-Point Perspective

Student | Task 3 of 4 | A4

Original prompt

Task 3: Place a Christmas tree in front of the corner. Draw the trunk as a vertical and the tree as a cone whose base is guided by the two receding directions.

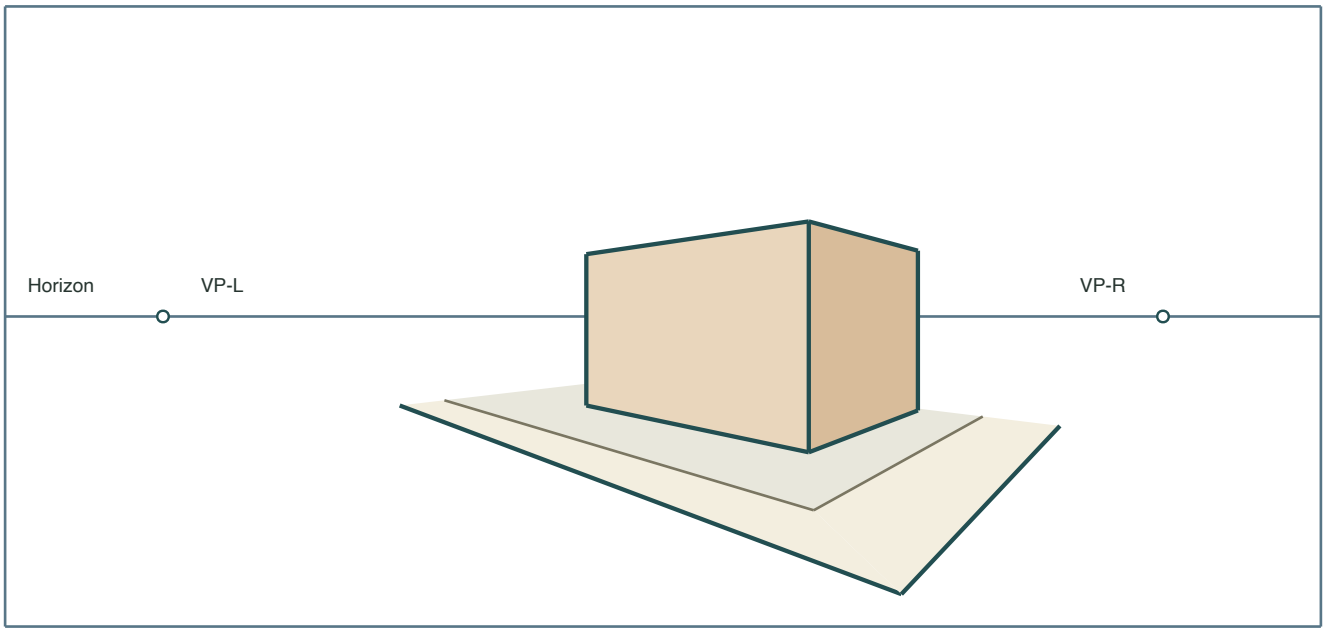

Build your next stage here

Draw a Christmas Scene in Two-Point Perspective

Student | Task 4 of 4 | A4

Original prompt

Task 4: Add two gift boxes on the pavement near the tree, each built with edges to both vanishing points and vertical sides, then check the whole scene.

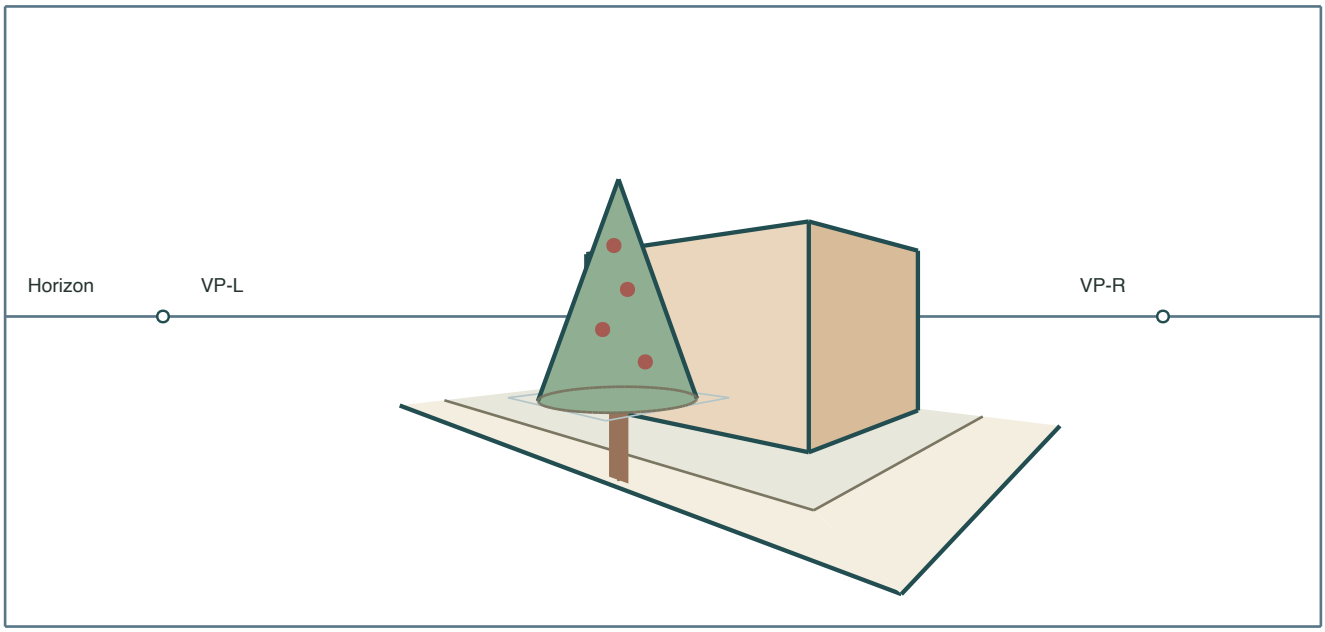

Build your next stage here