Draw a Christmas Scene in Two-Point Perspective

Original prompt

Task 1: Draw only the horizon, two vanishing points, and a single corner building as a box seen from a corner. No tree or gifts yet.

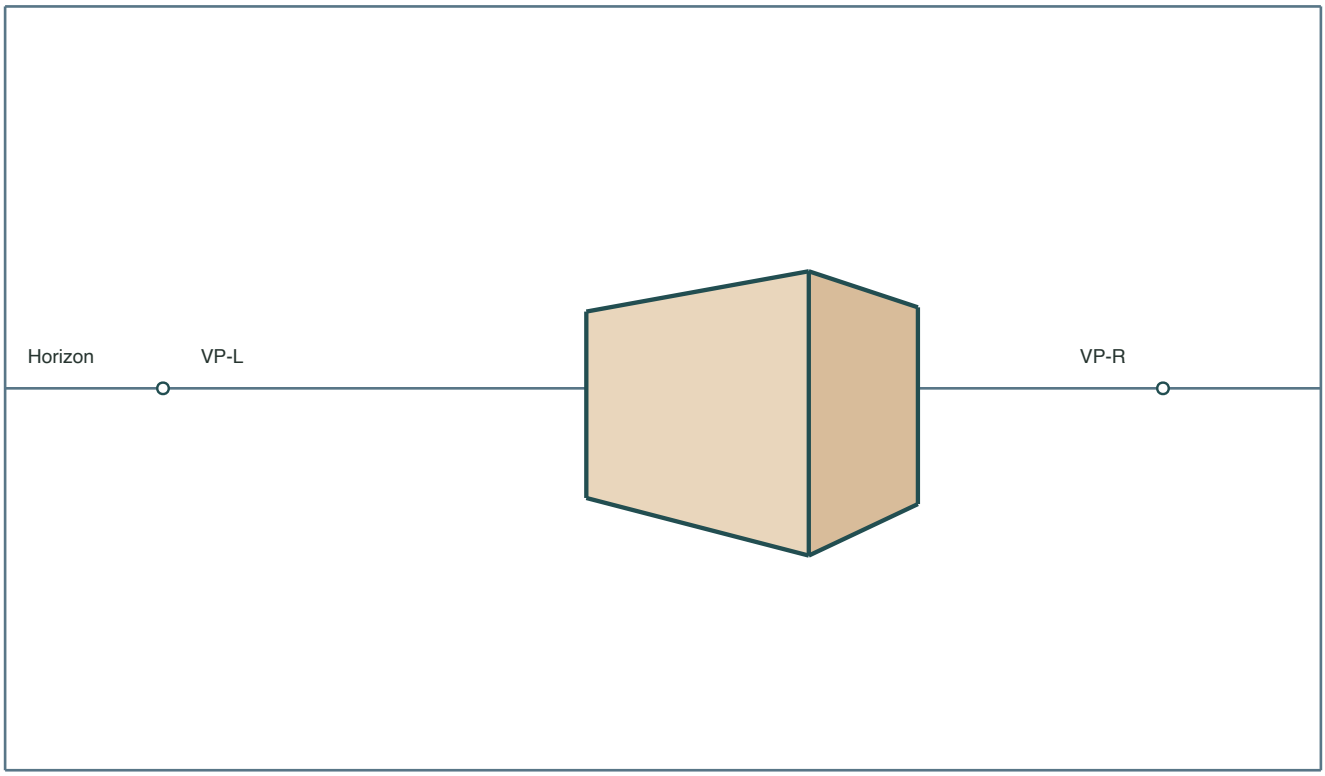

Answer

Horizon with left and right vanishing points marked. One vertical corner edge. Front face closed by lines to the left vanishing point and a vertical end edge; side face closed by lines to the right vanishing point and a vertical end edge.

Reasoning

The box is built entirely from the two receding directions plus verticals, which is the core of two-point perspective.

Check

Extend the level edges of each face to the point assigned to that face. Check the near and far uprights separately.

Draw a Christmas Scene in Two-Point Perspective

Answer I Task 2 of 4 I A4

Original prompt

Task 2: Add a street edge and a curb to the Task 1 corner, running in both receding directions.

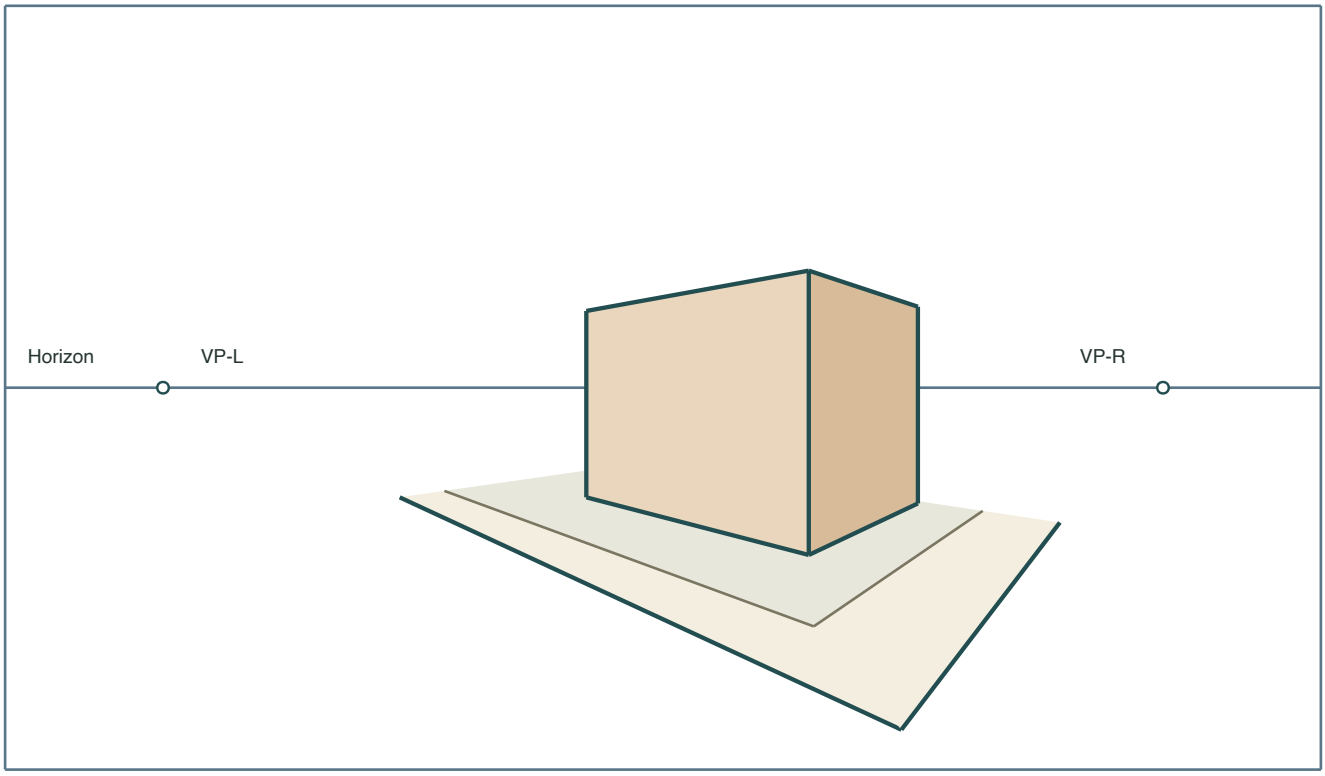

Answer

A street edge and a curb drawn as lines running to the left vanishing point on one side and to the right vanishing point on the other, meeting near the building corner.

Reasoning

Street lines follow the same two directions as the building, so the pavement recedes consistently with the corner.

Check

Each street line, extended, should meet one of the two vanishing points, and the curb should stay parallel in direction to the street edge.

Draw a Christmas Scene in Two-Point Perspective

Original prompt

Task 3: Place a Christmas tree in front of the corner. Draw the trunk as a vertical and the tree as a cone whose base is guided by the two receding directions.

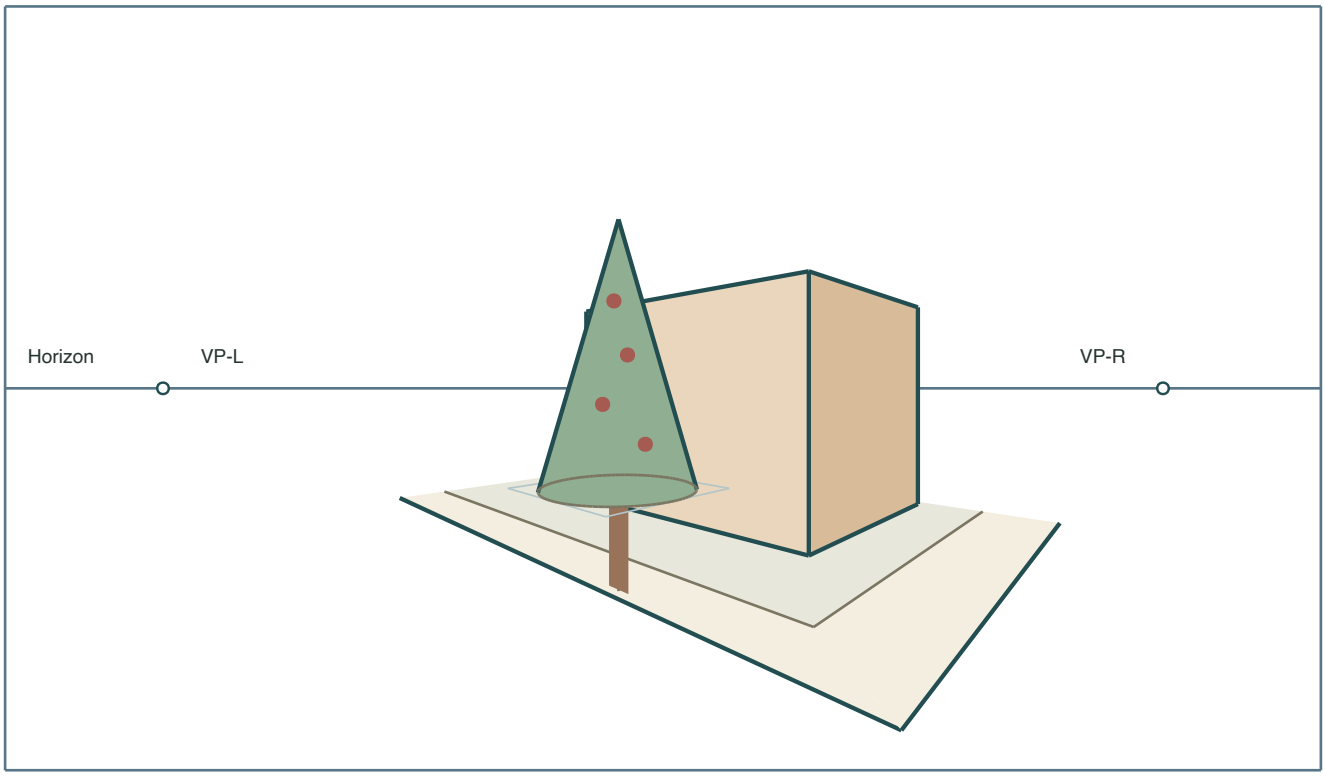

Answer

Draw the trunk upright with its foot on the ground. Fit the round cone base into the projected level square at the top of the trunk. Its two guide directions aim at VP-L and VP-R. The cone sides meet at the tip above that rim.

Reasoning

The square gives a level construction for the projected round rim. The vertical trunk connects its center to the ground plane.

Check

Check that the trunk is upright and meets the ground. Compare the rim with its guide square and check that the cone sides meet at the tip.

Draw a Christmas Scene in Two-Point Perspective

Original prompt

Task 4: Add two gift boxes on the pavement near the tree, each built with edges to both vanishing points and vertical sides, then check the whole scene.

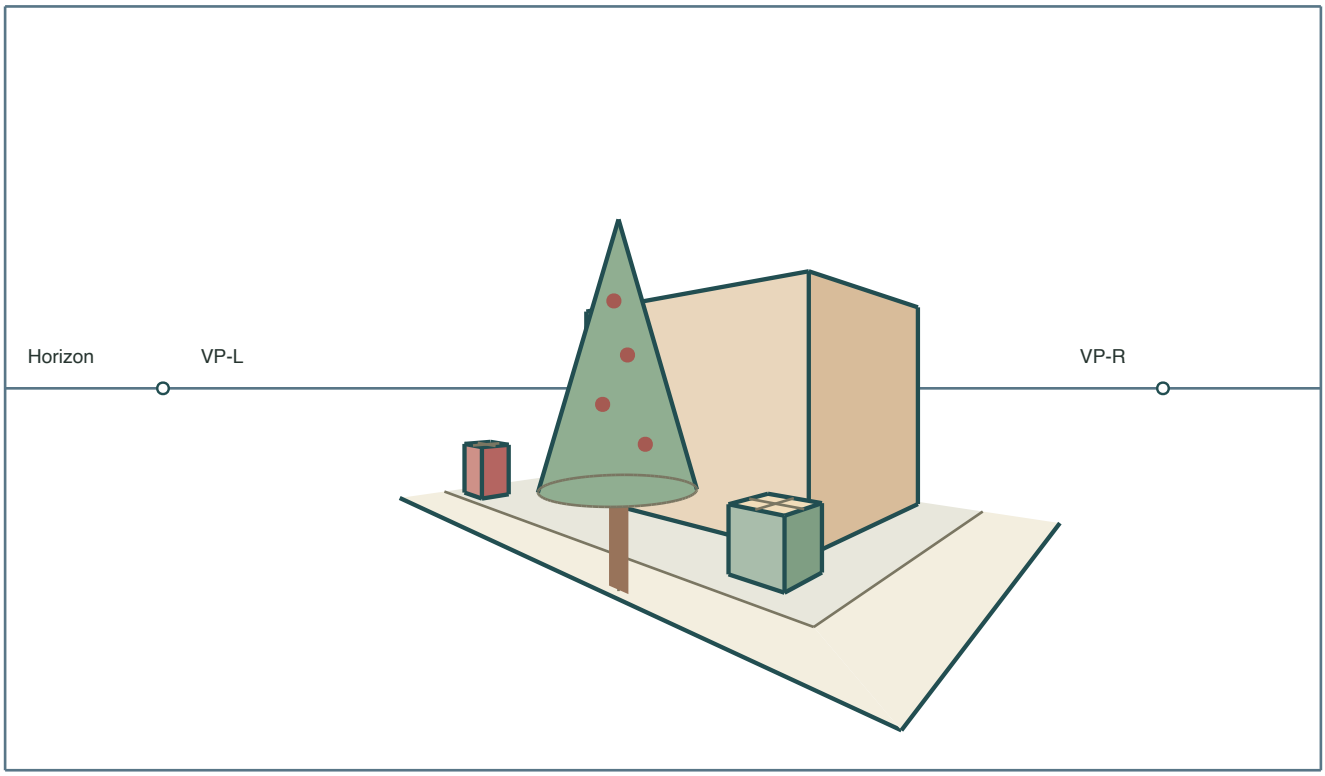

Answer

Place two boxes on separate pavement footprints. Each box has level edges in the left and right vanishing directions and upright corner edges. Extend the level building, curb and gift edges to their points. Check that the tree's trunk is upright, the rim follows its level guide square and the sides meet at the tip.

Reasoning

Both gifts sit in the same space as the building because their footprints lie on the same pavement plane. The cone's own shape fixes its sloping sides.

Check

Extend the level edges of both gifts to their respective vanishing points. Their verticals remain upright, and each base rests on the pavement beside the tree.