Perspective Drawing Rubric

Reference | Rubric and reference | A4

Vanishing point

Vanishing point. Score 3 for one marked point used by all receding edges. Score 2 for one unmarked meeting point or drift in a minority of edges. Score 1 for no shared point.

Horizon

Horizon line: score 3 for a level horizon that contains the vanishing point. Score 2 when the line is present but tilted or the point is off the line. Score 1 when the horizon is missing.

Convergence

Convergence. Score 3 for one coherent receding family and upright verticals. Score 2 for one fault, such as a slanted vertical. Score 1 for incompatible families or several faults.

Total

Add the three criterion scores. The total is out of 9.

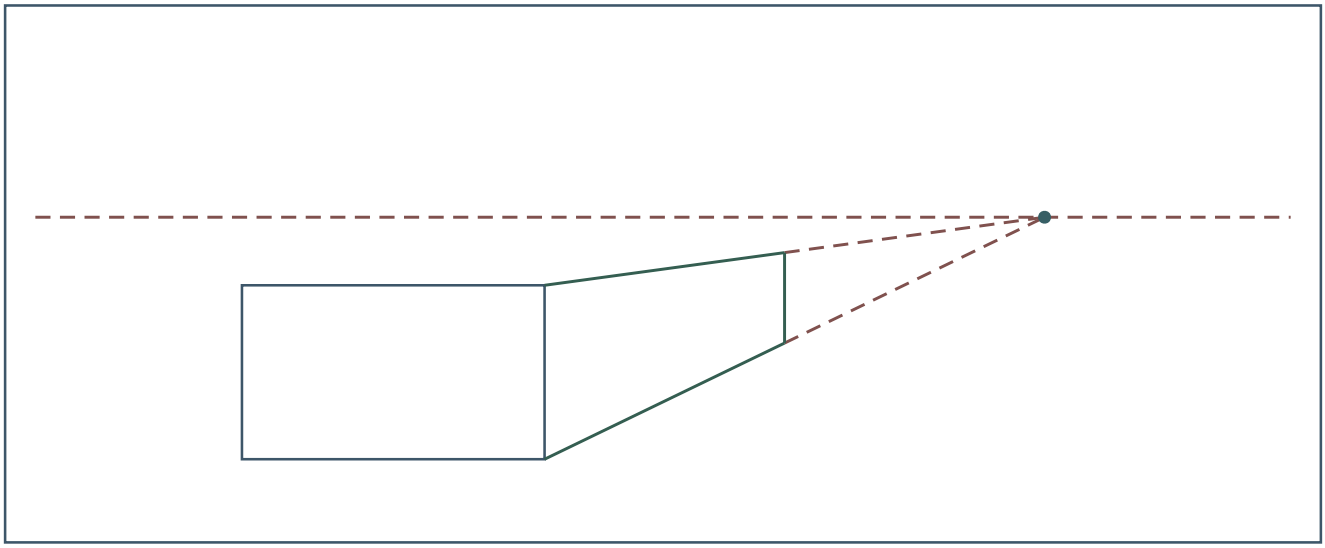

Vanishing point	Horizon	Convergence	Total

Perspective Drawing Rubric

Reference I Worked score I A4

Original prompt

Score the described drawing against the stated one-point reference.

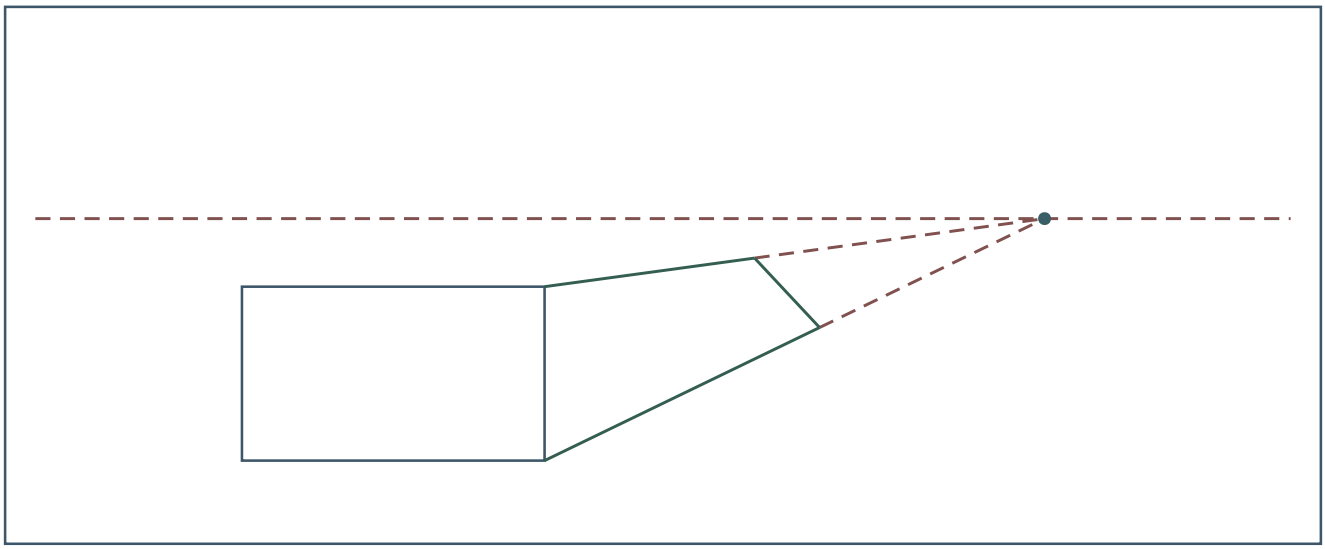

Vanishing point	Horizon	Convergence	Total
3	3	2	8 / 9

Answer

Vanishing point 3 (both receding edges meet at the stated point); horizon 3 (level, point on it); convergence 2 (one vertical slanted); total 8.

Reasoning

The receding edges satisfy the vanishing-point band, the horizon satisfies its band, and the slanted vertical is a convergence inconsistency, so it drops only that criterion.

Check

Re-read each band definition and confirm the fault is assigned to exactly one criterion.