Perspective Drawing Rubric

Answer | Task 1 of 4 | A4

Original prompt

Task 1: receding edges meet at a point above a level horizon; verticals correct.

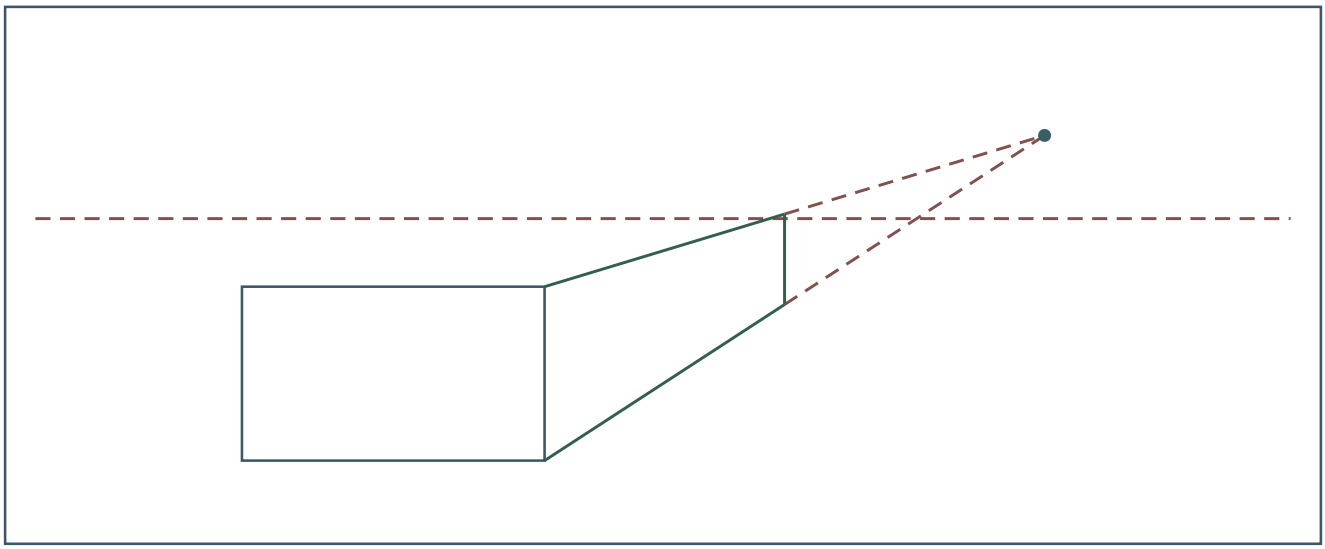

Vanishing point	Horizon	Convergence	Total
3	2	3	8 / 9

Answer

Vanishing point 3, horizon 2, convergence 3. Total 8.

Reasoning

All receding edges meet at the same marked point and the verticals are upright. Apply the reduction only to the horizon score because the point is above that line.

Check

Trace the edges to the same point, then compare the point's height with the level horizon. Add 3 + 2 + 3 to get 8.

Perspective Drawing Rubric

Answer I Task 2 of 4 I A4

Original prompt

Task 2: level horizon with a point on it, but receding edges meet at two different points.

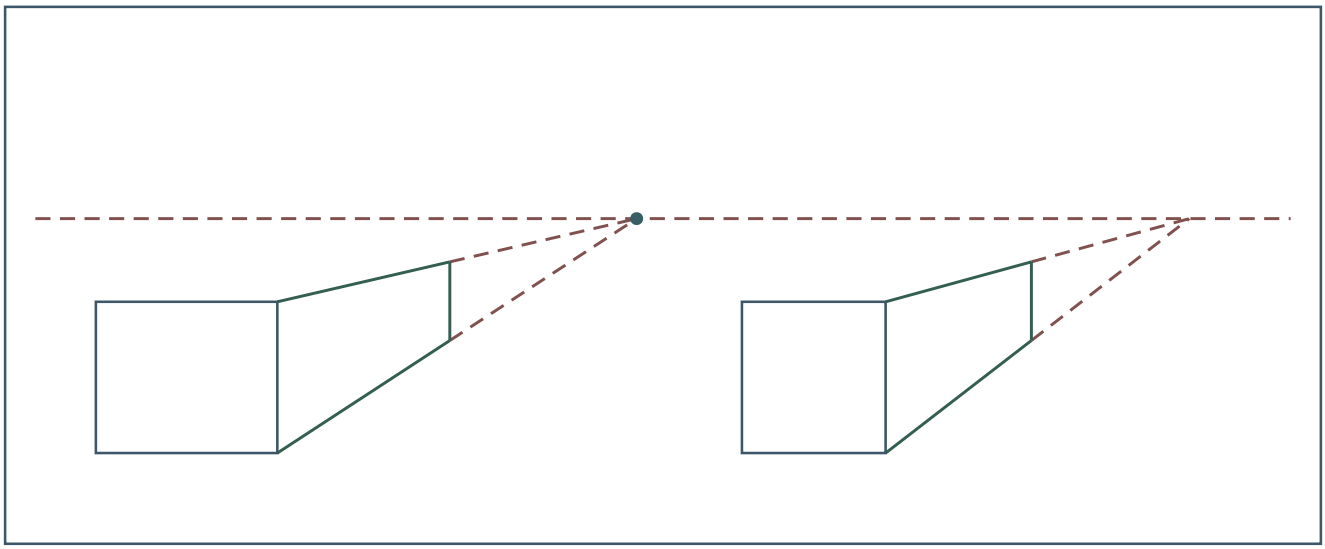

Vanishing point	Horizon	Convergence	Total
1	3	1	5 / 9

Answer

Vanishing point 1, horizon 3, convergence 1; total 5.

Reasoning

Two meeting points means no single vanishing point is used, so that band is 1; the split also breaks convergence; the horizon itself is correct.

Check

Check that the horizon band is scored on the horizon alone, independent of the convergence fault.

Perspective Drawing Rubric

Answer I Task 3 of 4 I A4

Original prompt

Task 3: no drawn horizon; receding edges all meet at one unmarked point; verticals correct.

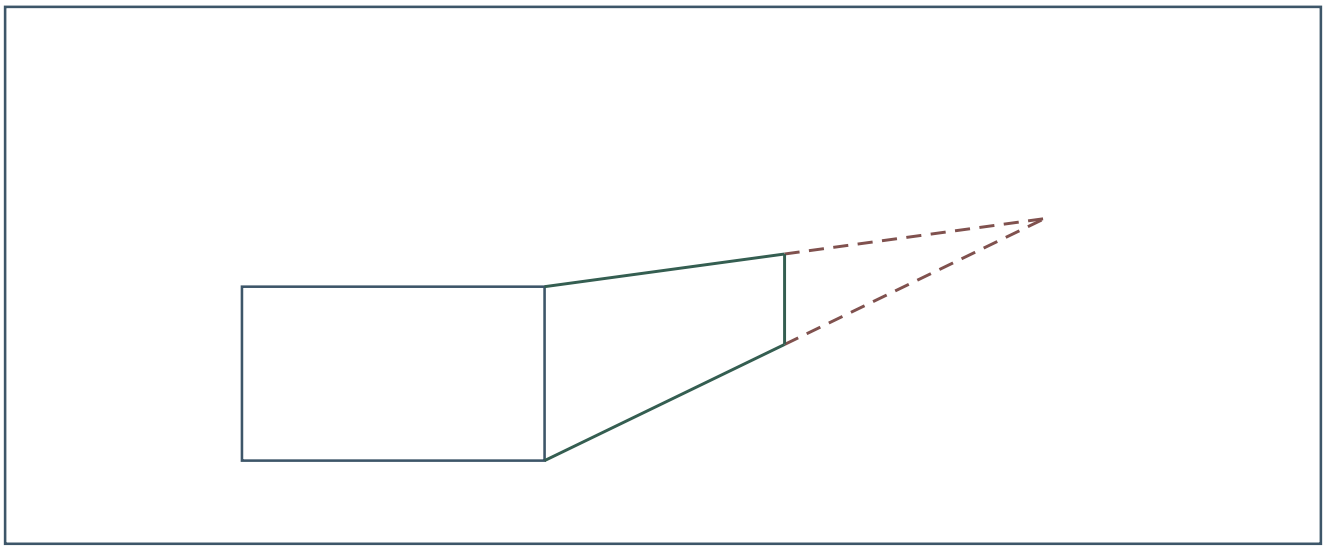

Vanishing point	Horizon	Convergence	Total
2	1	3	6 / 9

Answer

Vanishing point 2, horizon 1, convergence 3; total 6.

Reasoning

A single consistent meeting point earns 2 because it is unmarked, the missing horizon is 1, and convergence is correct.

Check

Confirm the meeting point is genuinely single before awarding 2.

Perspective Drawing Rubric

Original prompt

Task 4: tilted horizon with a point on it; receding edges all meet at that point; verticals correct.

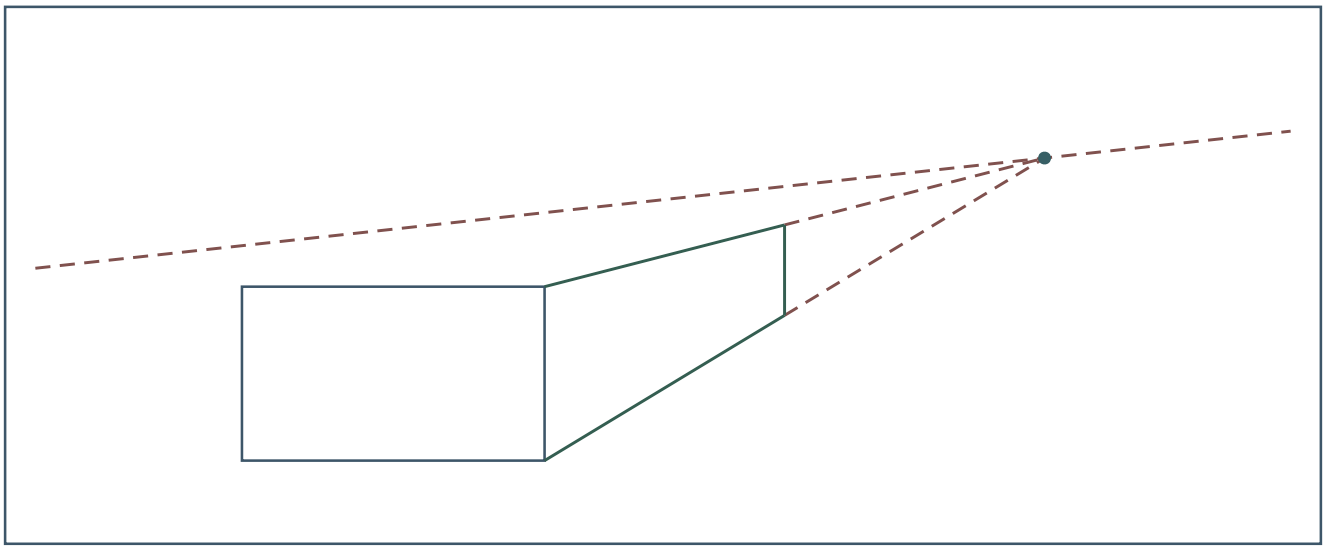

Vanishing point	Horizon	Convergence	Total
3	2	3	8 / 9

Answer

Vanishing point 3, horizon 2, convergence 3; total 8.

Reasoning

The point is used consistently and sits on the drawn line, so vanishing point is 3; the tilt drops the horizon to 2; convergence is correct.

Check

Verify the point lies on the tilted line, since that keeps the vanishing-point band at 3.