Perspective Drawing Rubric

Student | Task 1 of 4 | LETTER

Original prompt

Task 1: receding edges meet at a point above a level horizon; verticals correct.

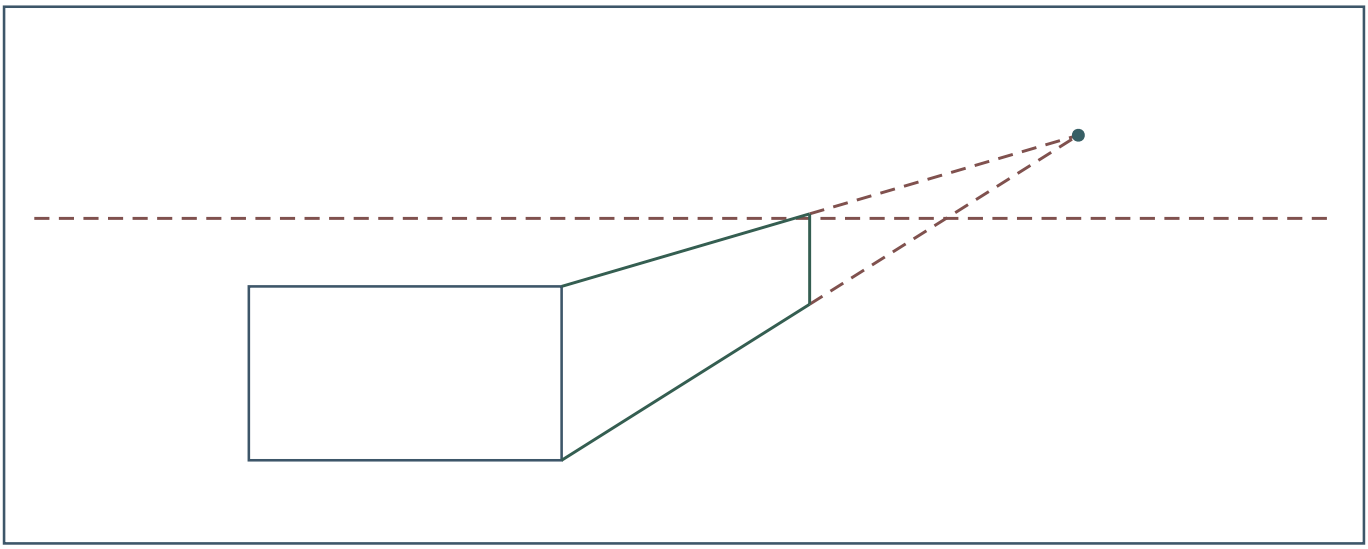

Vanishing point	Horizon	Convergence	Total

Your reasoning

Perspective Drawing Rubric

Student | Task 2 of 4 | LETTER

Original prompt

Task 2: level horizon with a point on it, but receding edges meet at two different points.

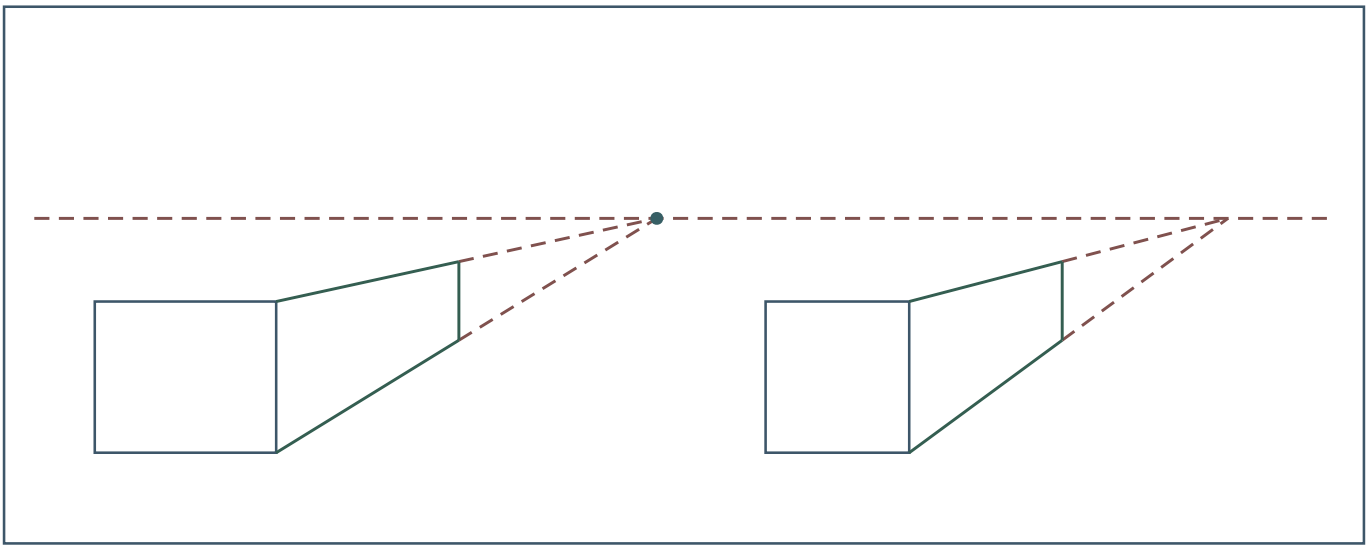

Vanishing point	Horizon	Convergence	Total

Your reasoning

Perspective Drawing Rubric

Student | Task 3 of 4 | LETTER

Original prompt

Task 3: no drawn horizon; receding edges all meet at one unmarked point; verticals correct.

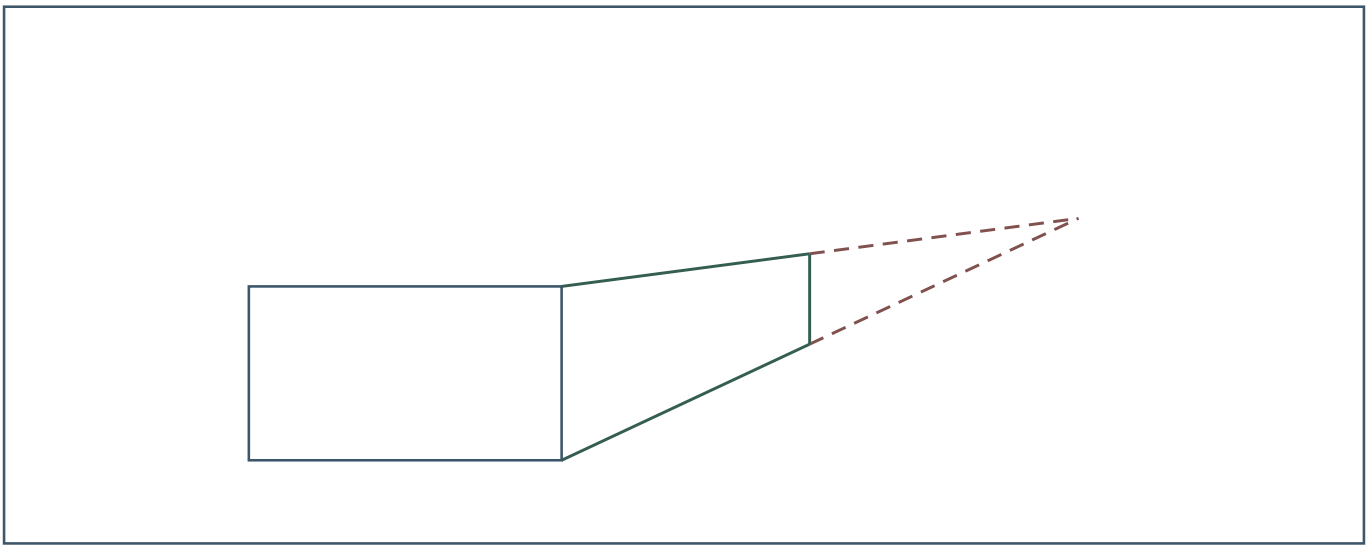

Vanishing point	Horizon	Convergence	Total

Your reasoning

Perspective Drawing Rubric

Student | Task 4 of 4 | LETTER

Original prompt

Task 4: tilted horizon with a point on it; receding edges all meet at that point; verticals correct.

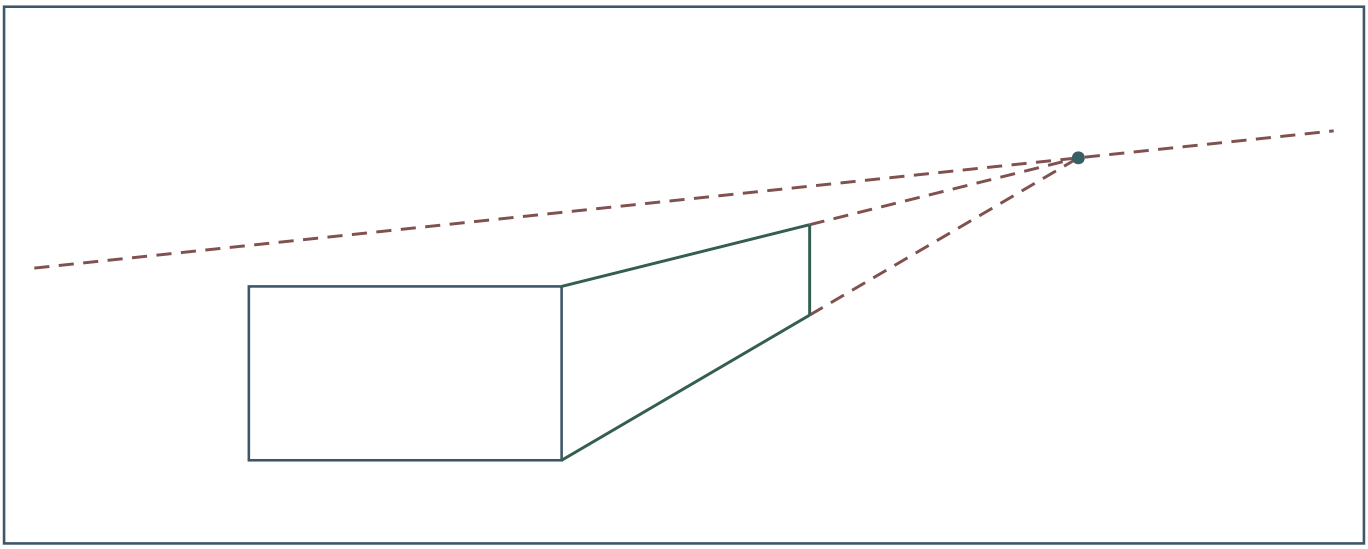

Vanishing point	Horizon	Convergence	Total

Your reasoning