Negative space: study 1

Study the shapes around and inside the objects. Copy the spaces into the lower frame. The answer shades background and enclosed openings; objects remain white. This is an original line illustration, not a photograph.

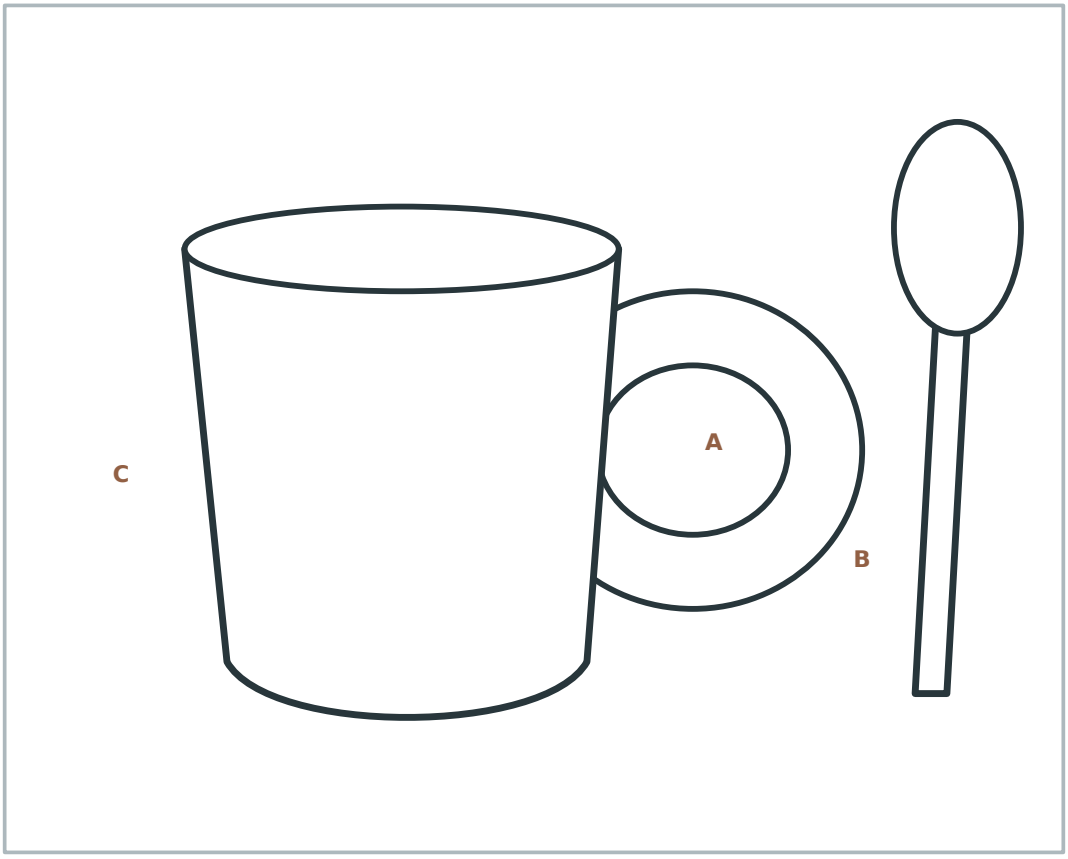

Lower copy frame: half the upper scale, with the same aspect ratio.

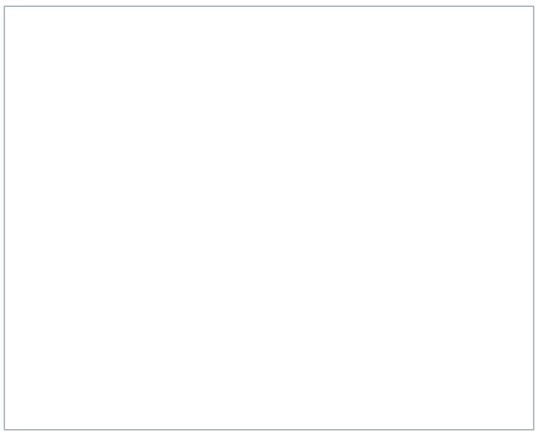

Check: same boundaries; enclosed openings are background too; preserve the gap widths. Shading is a reference choice, not a unique artistic answer.

Zumola / CC BY 4.0 / Free to print, share and adapt with attribution

Negative space: study 2

Study the shapes around and inside the objects. Copy the spaces into the lower frame. The answer shades background and enclosed openings; objects remain white. This is an original line illustration, not a photograph.

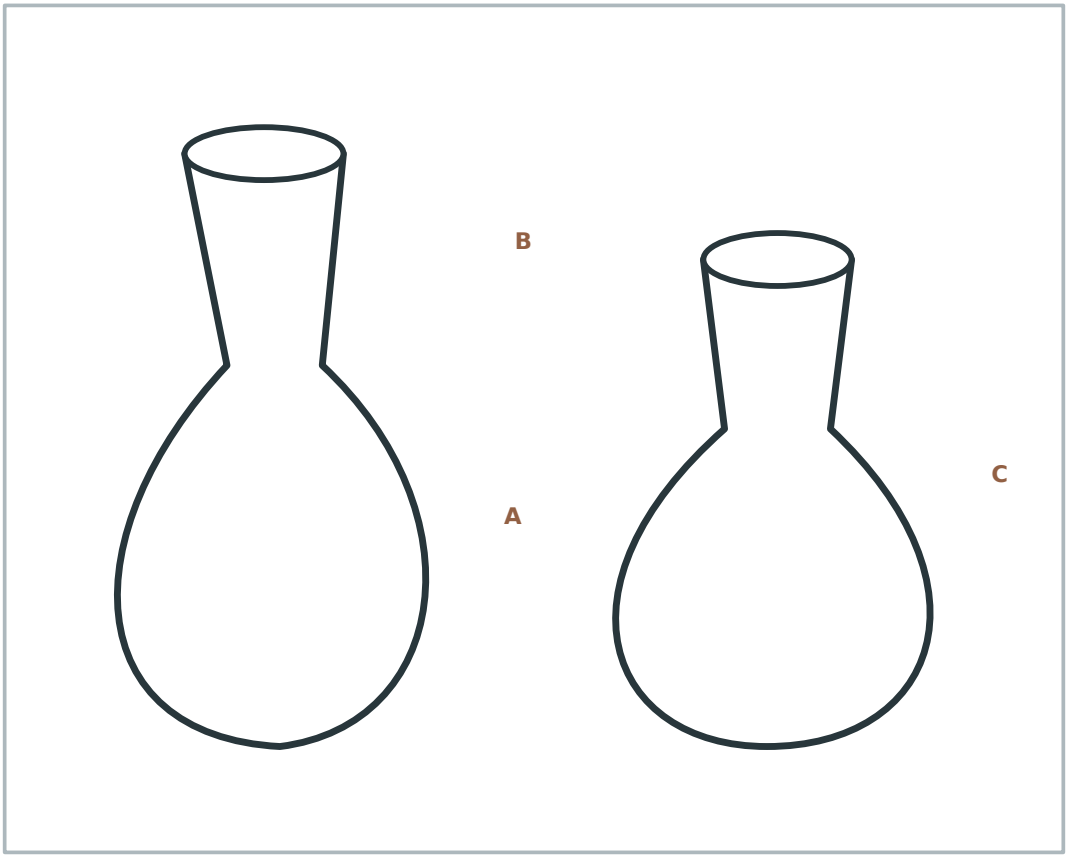

Lower copy frame: half the upper scale, with the same aspect ratio.

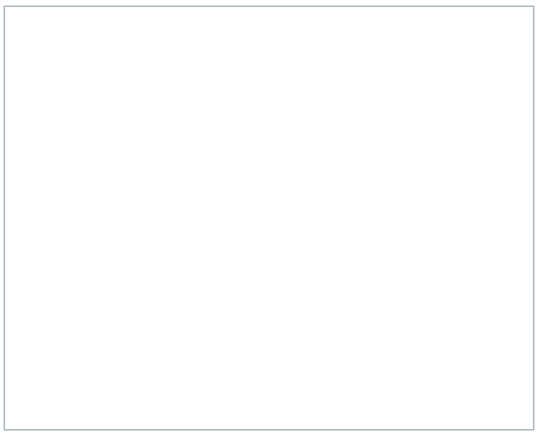

Check: same boundaries; enclosed openings are background too; preserve the gap widths. Shading is a reference choice, not a unique artistic answer.

Zumola / CC BY 4.0 / Free to print, share and adapt with attribution

Negative space: study 3

Study the shapes around and inside the objects. Copy the spaces into the lower frame. The answer shades background and enclosed openings; objects remain white. This is an original line illustration, not a photograph.

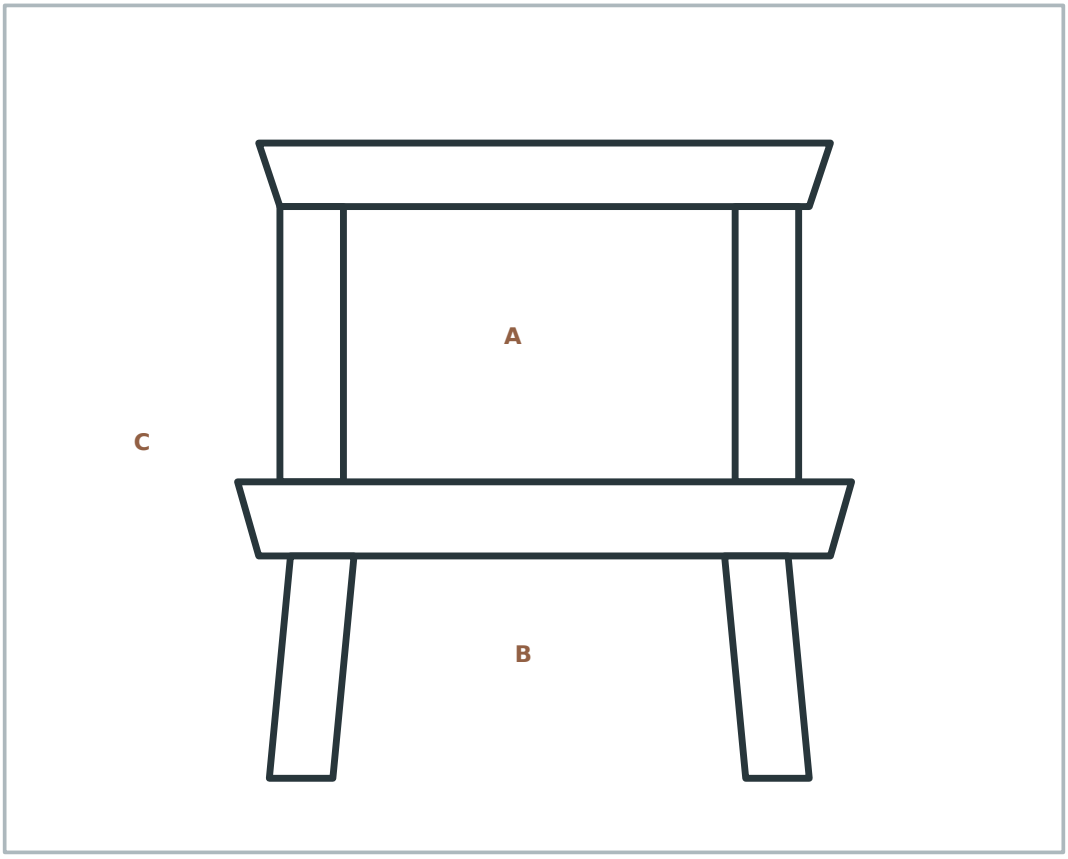

Lower copy frame: half the upper scale, with the same aspect ratio.

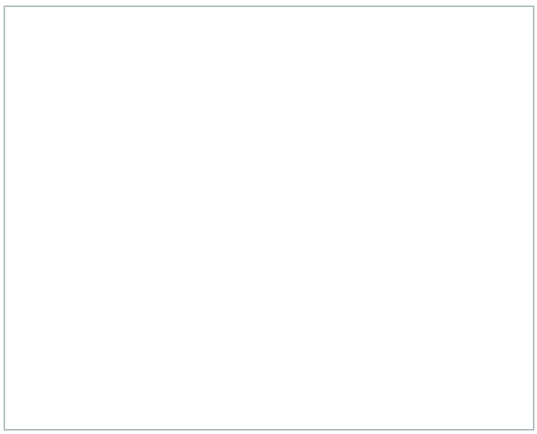

Check: same boundaries; enclosed openings are background too; preserve the gap widths. Shading is a reference choice, not a unique artistic answer.

Zumola / CC BY 4.0 / Free to print, share and adapt with attribution