Boxes and depth

Keep front-face edges horizontal or vertical. Depth edges aim toward VP. The smaller back face is a chosen image depth, not a measured room size.

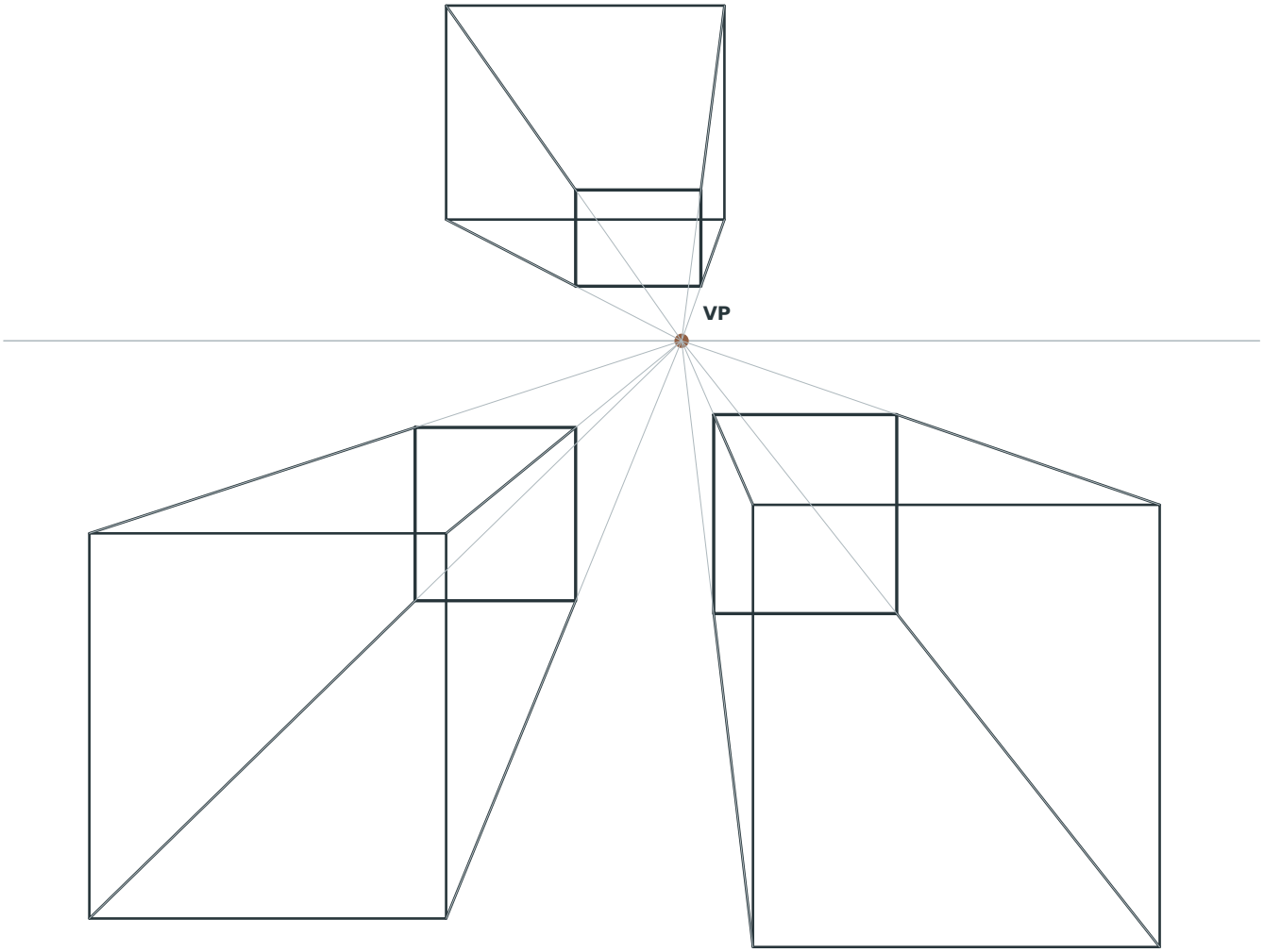

Check: extend each depth edge toward VP. Front and back corresponding corners lie on the same ray. Keep the back-face width / front-face width and height ratios equal to 0.45.

Zumola / CC BY 4.0 / Free to print, share and adapt with attribution

Corridor construction

Keep front-face edges horizontal or vertical. Depth edges aim toward VP. The smaller back face is a chosen image depth, not a measured room size.

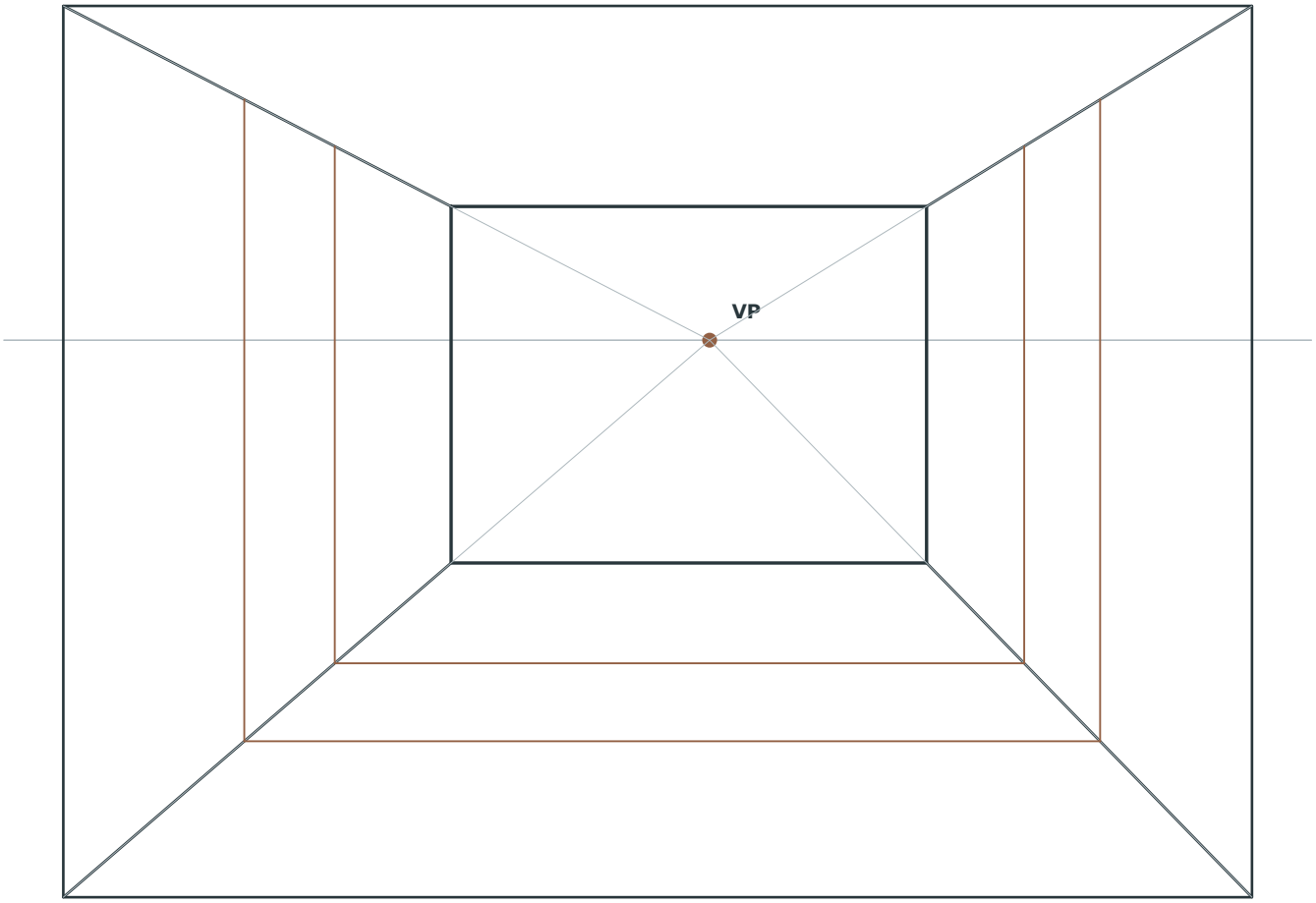

Check: extend each depth edge toward VP. Front and back corresponding corners lie on the same ray. Keep the back-face width / front-face width and height ratios equal to 0.4.

Zumola / CC BY 4.0 / Free to print, share and adapt with attribution

Room construction

Keep front-face edges horizontal or vertical. Depth edges aim toward VP. The smaller back face is a chosen image depth, not a measured room size.

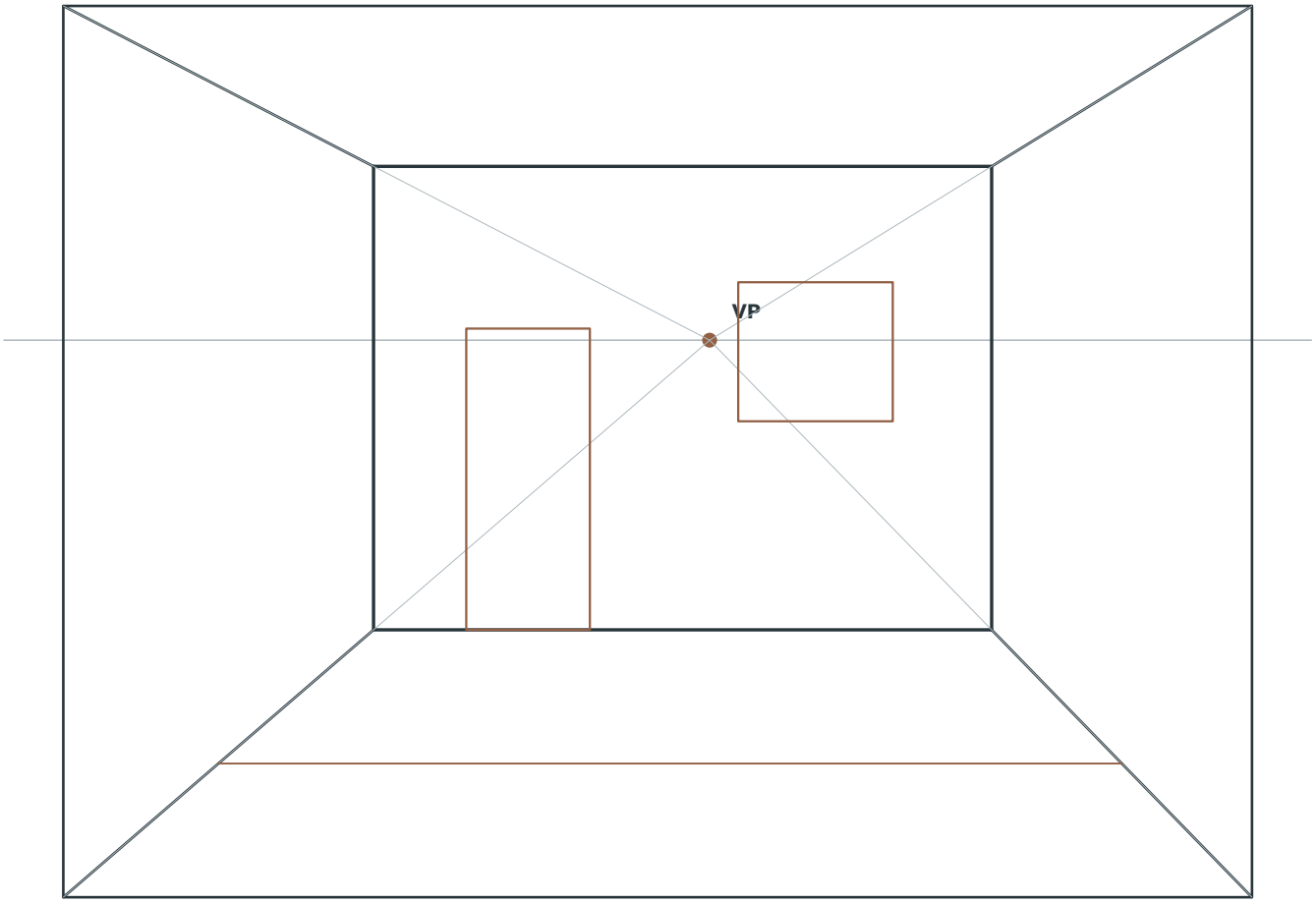

Check: extend each depth edge toward VP. Front and back corresponding corners lie on the same ray. Keep the back-face width / front-face width and height ratios equal to 0.52.

Zumola / CC BY 4.0 / Free to print, share and adapt with attribution