Upside-down line study: UD01

Copy the upper illustration into the lower box in the orientation shown. Compare angles, gaps and line junctions. Turn the whole page upright after finishing. The answer repeats the same rotated geometry.

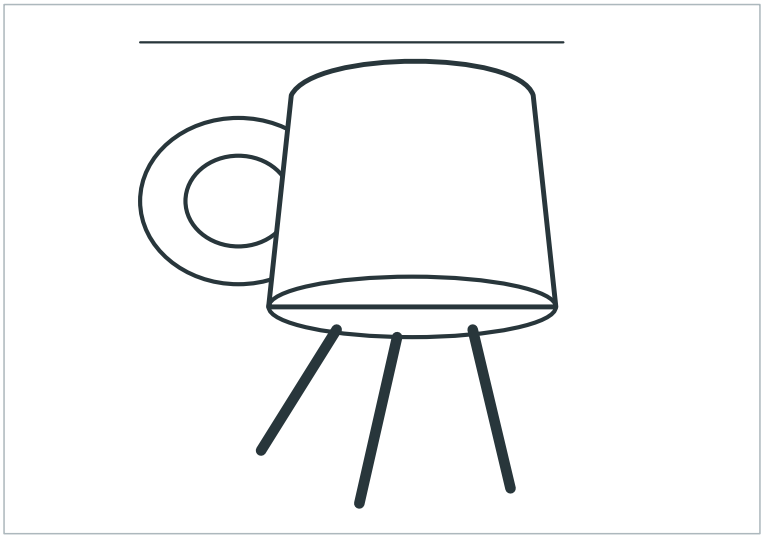

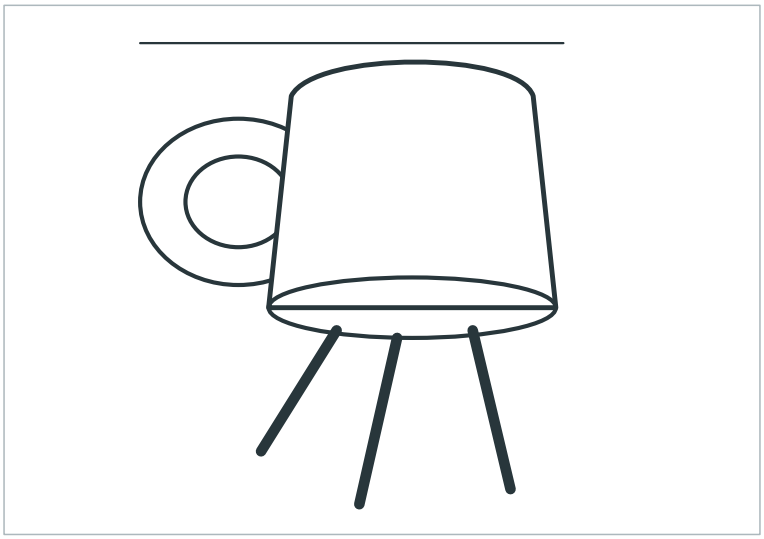

A rotation preserves handedness. It is not a left-right mirror. Compare the whole outline and a few landmarks; a hand copy need not match every vector point.

Zumola / CC BY 4.0 / Free to print, share and adapt with attribution

Upside-down line study: UD02

Copy the upper illustration into the lower box in the orientation shown. Compare angles, gaps and line junctions. Turn the whole page upright after finishing. The answer repeats the same rotated geometry.

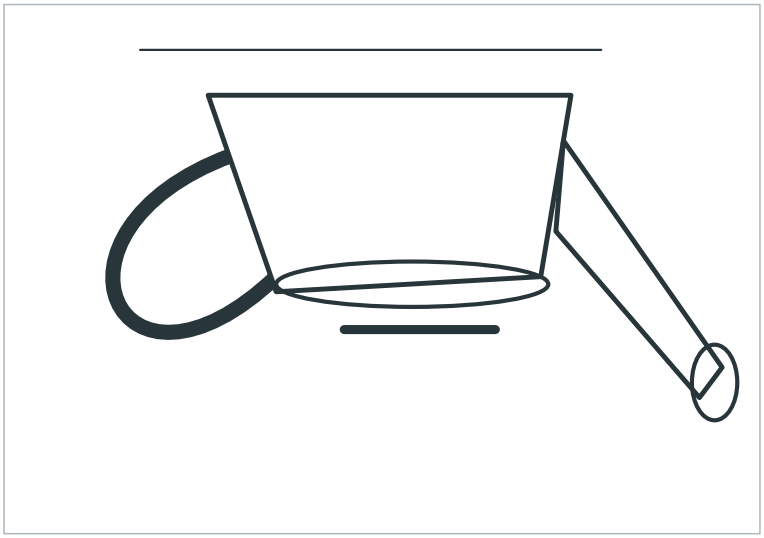

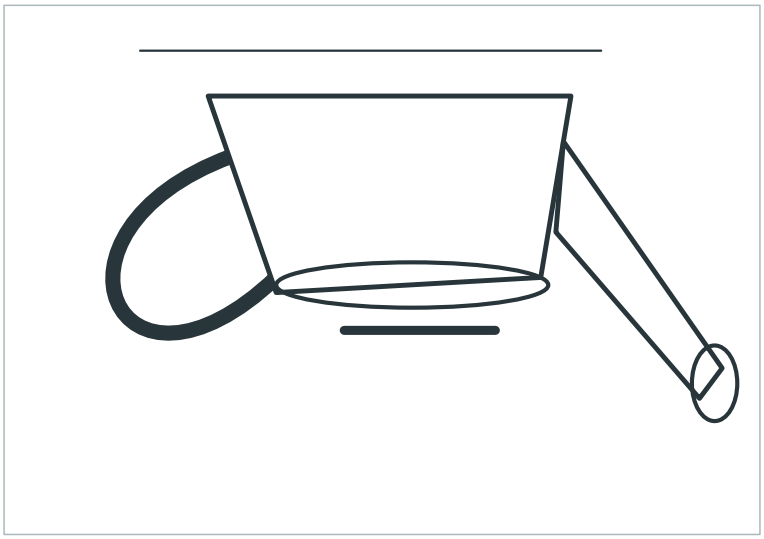

A rotation preserves handedness. It is not a left-right mirror. Compare the whole outline and a few landmarks; a hand copy need not match every vector point.

Zumola / CC BY 4.0 / Free to print, share and adapt with attribution

Upside-down line study: UD03

Copy the upper illustration into the lower box in the orientation shown. Compare angles, gaps and line junctions. Turn the whole page upright after finishing. The answer repeats the same rotated geometry.

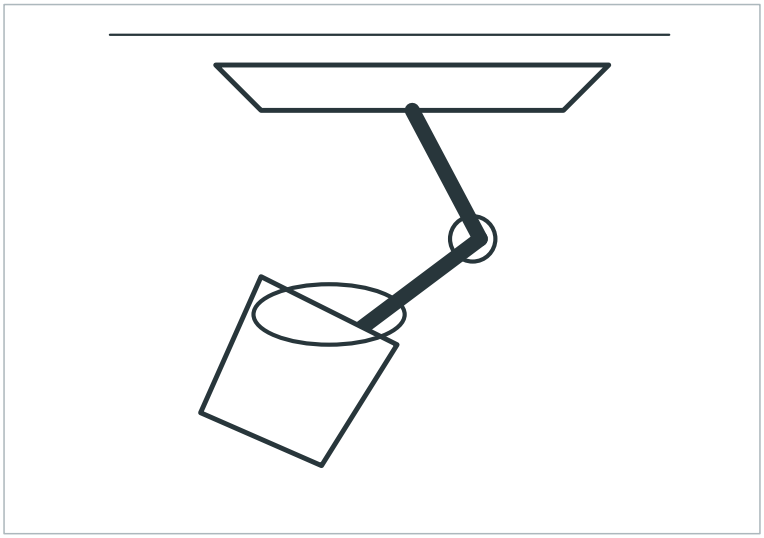

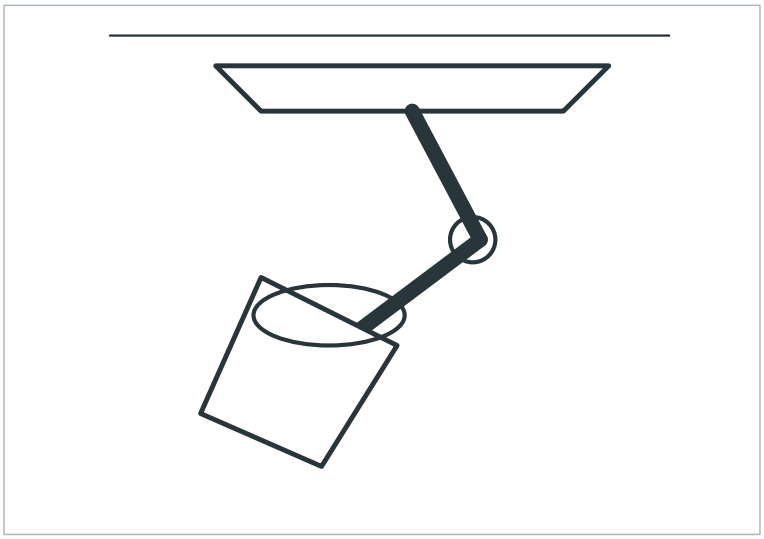

A rotation preserves handedness. It is not a left-right mirror. Compare the whole outline and a few landmarks; a hand copy need not match every vector point.

Zumola / CC BY 4.0 / Free to print, share and adapt with attribution